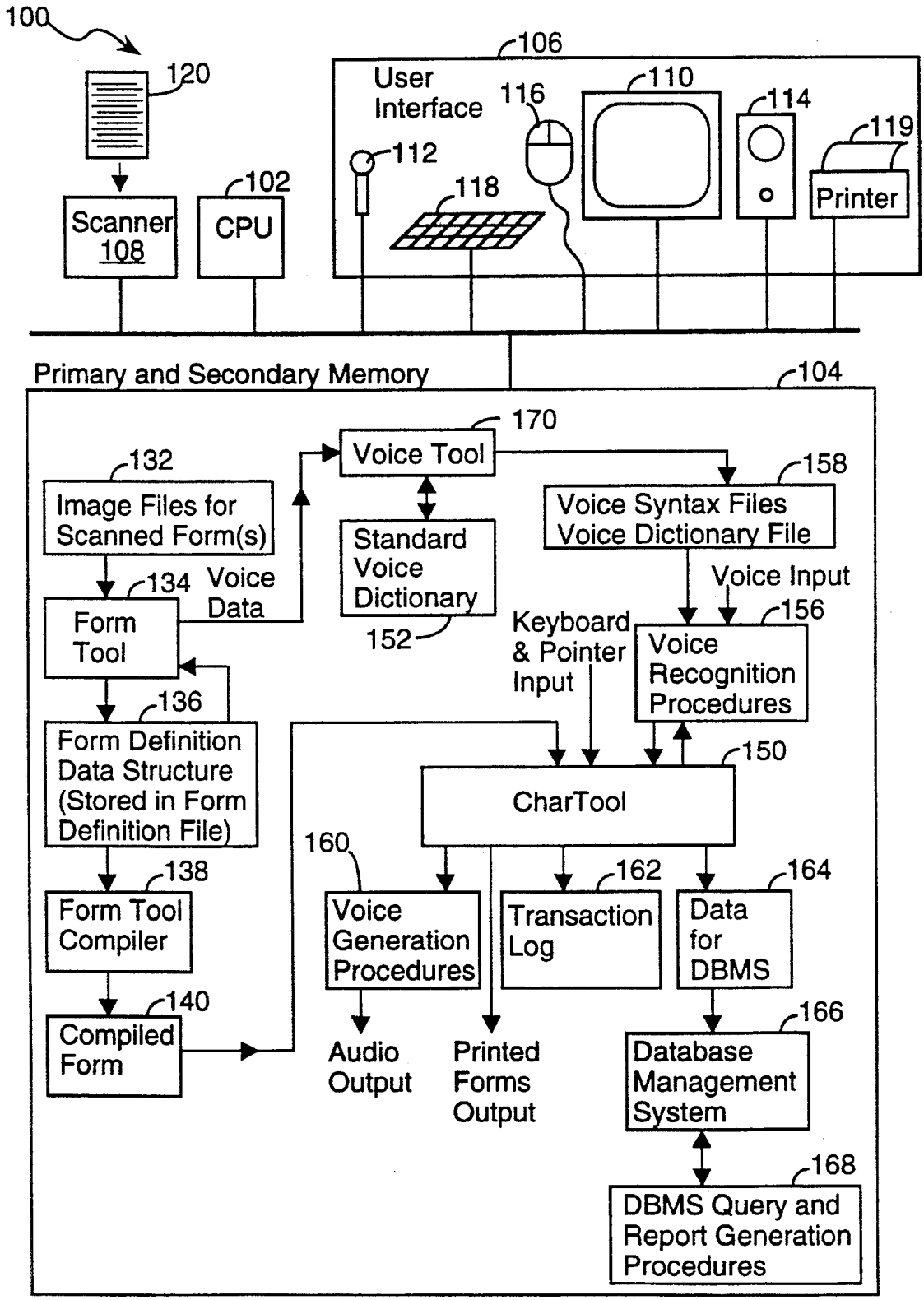
100
120
Scanner 108
102
CPU
106
User Interface
116
110
114
119
112
118
Printer
Primary and Secondary Memory
104
170
Voice Tool
132
Image Files for Scanned Form(s)
158
Voice Syntax Files Voice Dictionary File
Standard Voice Dictionary
152
134
Voice Data
Form Tool
Voice Input
156
Keyboard & Pointer Input
Voice Recognition Procedures
136
Form Definition Data Structure (Stored in Form Definition File)
150
CharTool
160
138
162
164
Form Tool Compiler
Voice Generation Procedures
Transaction Log
Data for DBMS
140
166
Compiled Form
Audio Output
Printed Forms Output
Database Management System
168
DBMS Query and Report Generation Procedures

FIGURE 1