METHOD FOR GRANULATING POWDERY MATERIALS

Original Filed Sept. 7, 1960 2 Sheets-Sheet 1

FIG. 1.

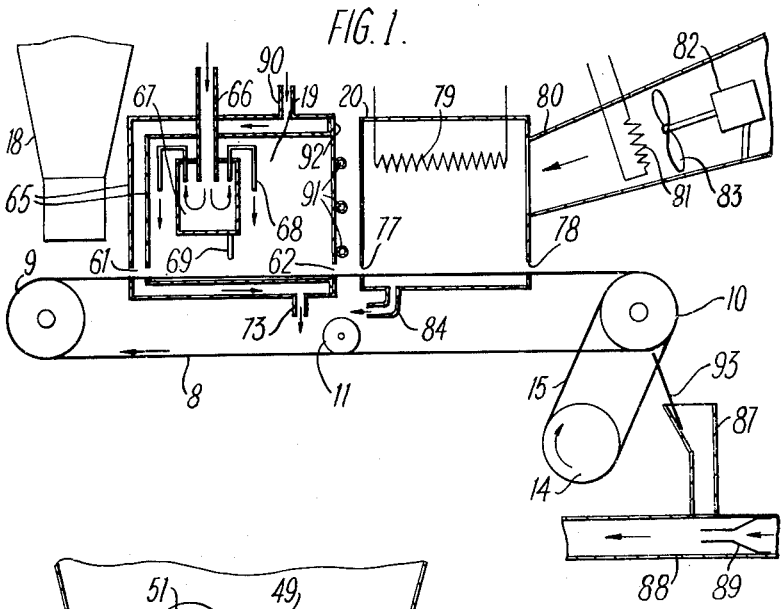

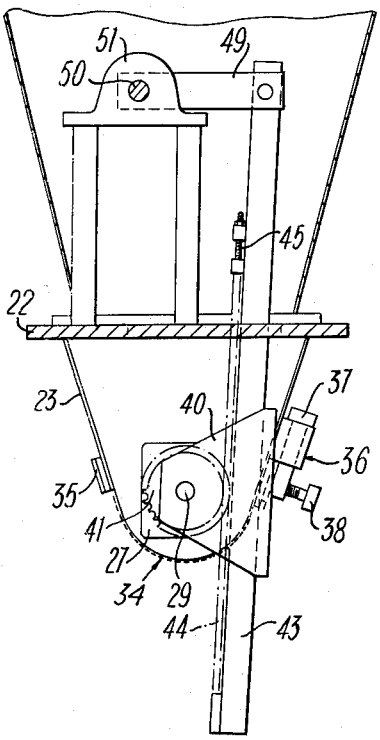

FIG. 3.

Inventors
GEORGE ALBERT CHILDS
ALEXANDER EDWARD METTLER
BY
Bacon & Thomas Attorneys