US009409108B2

(12) **United States Patent**
Lin

(10) **Patent No.: US 9,409,108 B2**
(45) **Date of Patent: Aug. 9, 2016**

(54) **MODULAR FILTER CAPSULE APPARATUS**

(75) Inventor: **Zhenwu Lin**, Pasadena, CA (US)

(73) Assignee: **Saint-Gobain Performance Pastics Corporation**, Solon, OH (US)

(*) Notice: Subject to any disclaimer, the term of this patent is extended or adjusted under 35 U.S.C. 154(b) by 966 days.

(21) Appl. No.: **13/441,028**

(22) Filed: **Apr. 6, 2012**

(65) **Prior Publication Data**

US 2013/0264265 A1 Oct. 10, 2013

(51) **Int. Cl.**

B01D 35/153	(2006.01)
B01D 35/147	(2006.01)
B01D 27/10	(2006.01)
B01D 46/42	(2006.01)
B01D 46/00	(2006.01)
F16L 37/42	(2006.01)
F16L 29/00	(2006.01)

(52) **U.S. Cl.**

CPC ***B01D 35/153*** (2013.01); ***B01D 27/106*** (2013.01); ***B01D 35/147*** (2013.01); ***B01D 46/0013*** (2013.01); ***B01D 46/42*** (2013.01); ***B01D 46/4272*** (2013.01); *B01D 2201/167* (2013.01); *F16L 29/007* (2013.01); *F16L 37/42* (2013.01)

(58) **Field of Classification Search**

CPC B01D 46/42; B01D 46/0013; B01D 46/4272; F16L 29/007

See application file for complete search history.

(56) **References Cited**

U.S. PATENT DOCUMENTS

3,289,847 A 12/1966 Rothemund
3,762,443 A * 10/1973 Sorenson F15B 13/04 137/625.27
3,986,960 A 10/1976 Wire et al. 210/232
4,045,345 A 8/1977 Drori 210/107
4,429,856 A * 2/1984 Jackson A61M 16/04 137/843
4,629,159 A * 12/1986 Wellenstam A61M 39/26 137/614.18
4,792,115 A * 12/1988 Jindra et al. 251/149.6
5,139,747 A * 8/1992 Cato et al. 422/122
5,242,581 A * 9/1993 Mohr B01D 29/114 137/528
5,397,468 A * 3/1995 Chomka et al. 210/232
5,477,883 A * 12/1995 Totten 137/614.03
5,651,887 A * 7/1997 Posner et al. 210/232
5,798,040 A 8/1998 Liang 210/232
5,882,602 A * 3/1999 Savage B01L 3/0293 137/614.03
6,105,664 A 8/2000 Gillbrand et al. 165/119
6,149,718 A * 11/2000 Cowan B01D 53/0415 55/417

(Continued)

FOREIGN PATENT DOCUMENTS

EP	2 275 188 A1	1/2011
WO	WO 97/26066	7/1997
WO	WO 0183077	11/2001

OTHER PUBLICATIONS

LinkTech 2012 Catalog, pp. 4-9.

(Continued)

Primary Examiner — Thomas M Lithgow
(74) *Attorney, Agent, or Firm* — Lorusso & Associates

(57) **ABSTRACT**

Disclosed is a disposable filter capsule apparatus that incorporates integral quick connect components and check valves to facilitate assembly to, and dis-assembly from, larger assemblies and apparatus. The quick connect elements and valves are configured to eliminate the need for auxiliary sealing elements, e.g., o-rings and valve springs so as to prevent unwanted reactions with fluids and/or gases flowing through the capsules, and to further prevent the disposal of expensive re-usable elements in the disposable capsules.
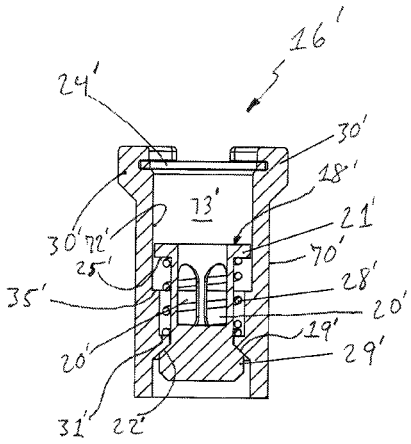
15 Claims, 5 Drawing Sheets