US009408708B2

(12) **United States Patent**
Greenhalgh

(10) **Patent No.: US 9,408,708 B2**
(45) **Date of Patent: Aug. 9, 2016**

(54) **FIXATION DEVICE AND METHOD**

(75) Inventor: **E. Skott Greenhalgh**, Lower Gwynedd, PA (US)

(73) Assignee: **Stout Medical Group, L.P.**, Quakertown, PA (US)

(*) Notice: Subject to any disclaimer, the term of this patent is extended or adjusted under 35 U.S.C. 154(b) by 0 days.

(21) Appl. No.: **12/617,663**

(22) Filed: **Nov. 12, 2009**

(65) **Prior Publication Data**

US 2010/0222884 A1 Sep. 2, 2010

Related U.S. Application Data

(60) Provisional application No. 61/113,691, filed on Nov. 12, 2008.

(51) **Int. Cl.**

A61F 2/44	(2006.01)
A61B 17/70	(2006.01)
A61F 2/46	(2006.01)
A61F 2/30	(2006.01)

(52) **U.S. Cl.**

CPC ***A61F 2/4405*** (2013.01); ***A61B 17/7064*** (2013.01); ***A61F 2/4455*** (2013.01); ***A61F 2/4611*** (2013.01); *A61F 2002/305* (2013.01); *A61F 2002/3008* (2013.01); *A61F 2002/30062* (2013.01); *A61F 2002/30387* (2013.01); *A61F 2002/30471* (2013.01); *A61F 2002/30492* (2013.01); *A61F 2002/30515* (2013.01); *A61F 2002/30522* (2013.01); *A61F 2002/30538* (2013.01); *A61F 2002/30579* (2013.01); *A61F 2002/30594* (2013.01); *A61F 2002/30841* (2013.01); *A61F 2002/4627* (2013.01); *A61F 2002/4677* (2013.01); *A61F 2210/0004* (2013.01); *A61F 2220/0025* (2013.01); *A61F 2220/0091* (2013.01); *A61F 2250/0006* (2013.01); *A61F 2250/0098* (2013.01); *A61F 2310/00017* (2013.01); *A61F 2310/00023* (2013.01); *A61F 2310/00029* (2013.01); *A61F 2310/0097* (2013.01); *A61F 2310/00101* (2013.01); *A61F 2310/00137* (2013.01); *A61F 2310/00796* (2013.01); *A61F 2310/00952* (2013.01); *A61F 2310/00976* (2013.01)

(58) **Field of Classification Search**

CPC A61F 2/4455–2/447; A61F 2002/4475–2002/449

USPC 623/17.11–17.16; 606/246–279

See application file for complete search history.

(56) **References Cited**

U.S. PATENT DOCUMENTS

2002/0026244	A1*	2/2002	Trieu	623/17.16
2002/0138146	A1*	9/2002	Jackson	623/17.15
2006/0085075	A1*	4/2006	McLeer	623/17.12
2006/0129244	A1	6/2006	Ensign	
2006/0149239	A1*	7/2006	Winslow et al.	606/61

(Continued)

OTHER PUBLICATIONS

Franklin et al., "Uptake of Tetracycline by Aortic Aneurysm Wall and Its Effect on Inflammation and Proteolysis," *Brit. J. Surger*, 86(6):771-775.

(Continued)

Primary Examiner — Nicholas Plionis

(74) *Attorney, Agent, or Firm* — Levine Bagade Han LLP

(57) **ABSTRACT**

An implantable orthopedic stability device is disclosed. The device can have a contracted and an expanded configuration. A method of using the device between adjacent facet surfaces for support and/or fixation of either or both of the adjacent vertebrae is also disclosed.
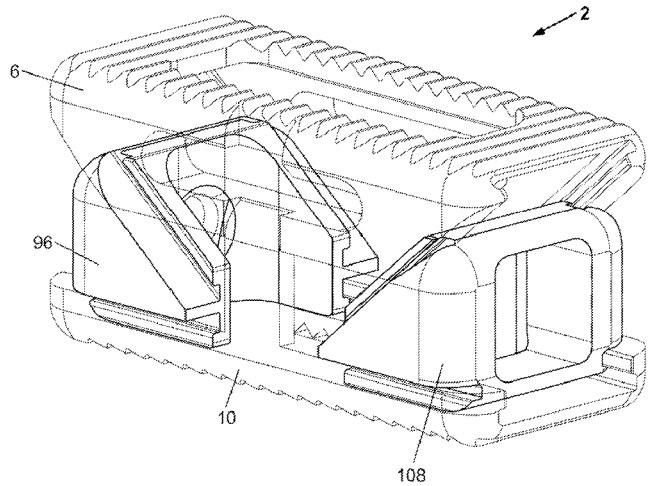
28 Claims, 55 Drawing Sheets