350-342

SR

XR 3,803,408

TX 3114R

United State

Assouline et al.

[11] 3,803,408

[45] Apr. 9, 1974

[54] **IMAGE CONVERTER**

[75] Inventors: **Georges Assouline; Eugene Leiba; Erich Spitz,** all of Paris, France

[73] Assignee: **Thomson-CSF,** Paris, France

[22] Filed: **Jan. 15, 1973**

[21] Appl. No.: **323,358**

Related U.S. Application Data

[63] Continuation of Ser. No. 43,427, June 4, 1970, abandoned.

[30] **Foreign Application Priority Data**

June 11, 1969 France 69.19329

[52] **U.S. Cl.**..... **250/213 R,** 250/331, 350/160 LC, 23/230 LC

[51] **Int. Cl.** **G02f 1/18**

[58] **Field of Search**..... 250/213 VT, 331; 313/91, 313/92; 350/160 LC; 23/230 LC; 178/7.7

[56] **References Cited**

UNITED STATES PATENTS

3,401,262	9/1968	Fergason et al.	250/213 X
3,499,112	3/1970	Heilmeier et al.	178/7.7
3,322,485	5/1967	Williams	350/160 LC
2,892,380	6/1959	Baumann et al.	250/213 X
3,627,408	12/1971	Fergason	250/213 VT
3,503,672	3/1970	Marlowe	350/160 LC
3,503,673	3/1970	Heilmeier et al.	360/160 LC

OTHER PUBLICATIONS

Heilmeier et al.: Dynamic Scattering, Proceedings of the IEEE, Vol. 56; No. 7; July, 1968; pp. 1162–1171.

Primary Examiner—Walter Stolwein

Attorney, Agent, or Firm—Cushman, Darby & Cushman

[57] **ABSTRACT**

An image converter comprising, between two transparent electrodes connected to a d.c. supply source, a layer of nematic liquid crystal and a layer of photoconductive material located against each other. An image to be converted is projected onto the photoconductive layer and the liquid crystal layer is illuminated by an auxiliary light source.

5 Claims, 5 Drawing Figures

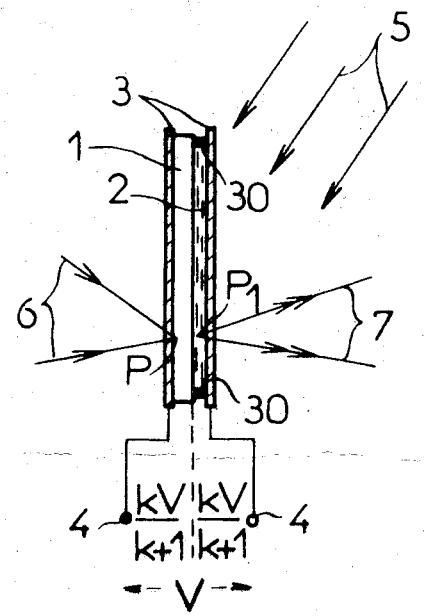

3803408
OR IN 250/213R