US007992307B2

(12) **United States Patent**
Smal

(10) **Patent No.: US 7,992,307 B2**
(45) **Date of Patent: Aug. 9, 2011**

(54) **HAIR CLIPPER WITH MOTORISED CUTTING GUIDE**

(75) Inventor: **Olivier Smal**, Magnee (BE)

(73) Assignee: **Babyliss Faco S.A.** (BE)

(*) Notice: Subject to any disclaimer, the term of this patent is extended or adjusted under 35 U.S.C. 154(b) by 588 days.

(21) Appl. No.: **11/994,729**

(22) PCT Filed: **Jun. 20, 2006**

(86) PCT No.: **PCT/BE2006/000069**

§ 371 (c)(1), (2), (4) Date: **Jan. 4, 2008**

(87) PCT Pub. No.: **WO2007/006106**

PCT Pub. Date: **Jan. 18, 2007**

(65) **Prior Publication Data**

US 2008/0163495 A1 Jul. 10, 2008

(30) **Foreign Application Priority Data**

Jul. 7, 2005 (EP) 05447164

(51) **Int. Cl.**
B26B 19/00 (2006.01)

(52) **U.S. Cl.** **30/202**; 30/233.5

(58) **Field of Classification Search** 30/200–202, 30/233.5, 123, 34.05
See application file for complete search history.

(56) **References Cited**

U.S. PATENT DOCUMENTS

1,753,750	A *	4/1930	McArdle et al.	30/201
1,988,199	A *	1/1935	Greco et al.	30/202
2,103,418	A *	12/1937	Hagebeuker	30/202
2,726,447	A *	12/1955	Maloy	30/202
2,809,425	A *	10/1957	Tettis	30/233.5
2,911,715	A *	11/1959	Seifert	30/202
2,941,293	A *	6/1960	Mazzoni	30/201
2,974,412	A *	3/1961	Clark	30/201
3,287,805	A *	11/1966	Du Charme	30/202
4,845,852	A *	7/1989	Sukow	30/201
5,327,648	A *	7/1994	Ullmann	30/200
5,669,921	A *	9/1997	Berman et al.	606/167
5,810,858	A *	9/1998	Berman et al.	606/167
5,898,999	A *	5/1999	Chaouachi et al.	30/201
6,497,043	B1 *	12/2002	Jacobsen	30/34.05
6,634,104	B2 *	10/2003	Jacobsen	30/34.05
6,968,623	B2 *	11/2005	Braun et al.	30/201
7,100,283	B1 *	9/2006	Grdodian et al.	30/34.05
2003/0204956	A1	11/2003	Chan	
2007/0227011	A1 *	10/2007	Caric	30/123
2007/0251097	A1 *	11/2007	Terry	30/123
2010/0083508	A1 *	4/2010	Cheng	30/201
2010/0186234	A1 *	7/2010	Binder	30/34.05

FOREIGN PATENT DOCUMENTS

EP	0 484 795	A1	5/1992
EP	1 510 305	A1	8/2004
EP	1710055	A1 *	10/2006
GB	4600		10/1911
JP	06134149	A *	5/1994
WO	WO 2004/033164	A1	4/2004
WO	WO 2007006106	A1 *	1/2007

* cited by examiner

Primary Examiner — Jason Daniel Prone

(74) *Attorney, Agent, or Firm* — Reinart Boerner Van Deuren P.C.

(57) **ABSTRACT**

The invention concerns a hair clipper comprising a device for adjusting the position of a powered cutting guide slaved to an electronic device, automatically adapting the position of said cutting guide based on the option selected by the user.
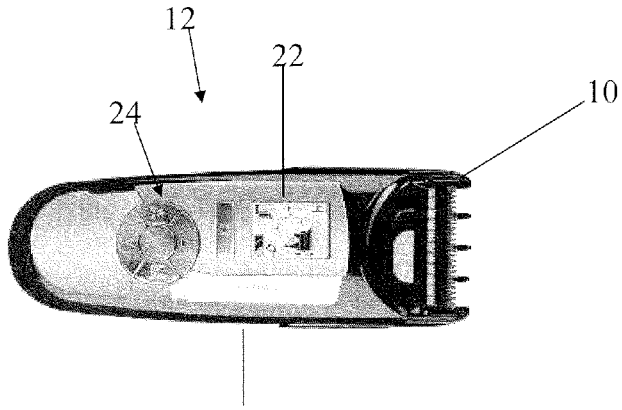
4 Claims, 4 Drawing Sheets