US005985307A

United States Patent [19]

Hanson et al.

[11] **Patent Number: 5,985,307**

[45] **Date of Patent: Nov. 16, 1999**

[54] **DEVICE AND METHOD FOR NON-OCCLUSIVE LOCALIZED DRUG DELIVERY**

[75] Inventors: **Stephen R. Hanson**, Stone Mountain; **Neal A. Scott**; **Spencer B. King, III**, both of Atlanta; **Christos Markou**, Dunwoody, all of Ga.

[73] Assignee: **Emory University**, Atlanta, Ga.

[21] Appl. No.: **08/982,537**

[22] Filed: **Dec. 2, 1997**

Related U.S. Application Data

[63] Continuation-in-part of application No. 08/660,203, Jun. 3, 1996, Pat. No. 5,709,874, which is a continuation of application No. 08/188,248, Jan. 28, 1994, Pat. No. 5,523,092, which is a continuation-in-part of application No. 08/046,622, Apr. 14, 1993, Pat. No. 5,399,352.

[51] **Int. Cl.**[6] **A61M 25/088**

[52] **U.S. Cl.** **424/423**; 604/96; 604/101; 604/264; 604/280; 604/281

[58] **Field of Search** 424/423; 604/96, 604/101, 264, 280, 281

[56] **References Cited**

U.S. PATENT DOCUMENTS

5,256,146 10/1993 Ensminger et al. 604/104

Primary Examiner—Carlos A. Azpuru
Attorney, Agent, or Firm—Needle & Rosenberg, P.C.

[57] **ABSTRACT**

A device for the local delivery of a substance into a natural tissue conduit in the mammalian body. The device provides a means for locally delivering a substance into the boundary layer of fluid flowing through the conduit without substantially disrupting the fluid flow therethrough. For example, an indwelling endovascular support device is provided for delivery of a substance locally to a targeted treatment area. Also provided are methods of locally delivering a substance into a natural tissue conduit in the mammalian body utilizing the device of the present invention.
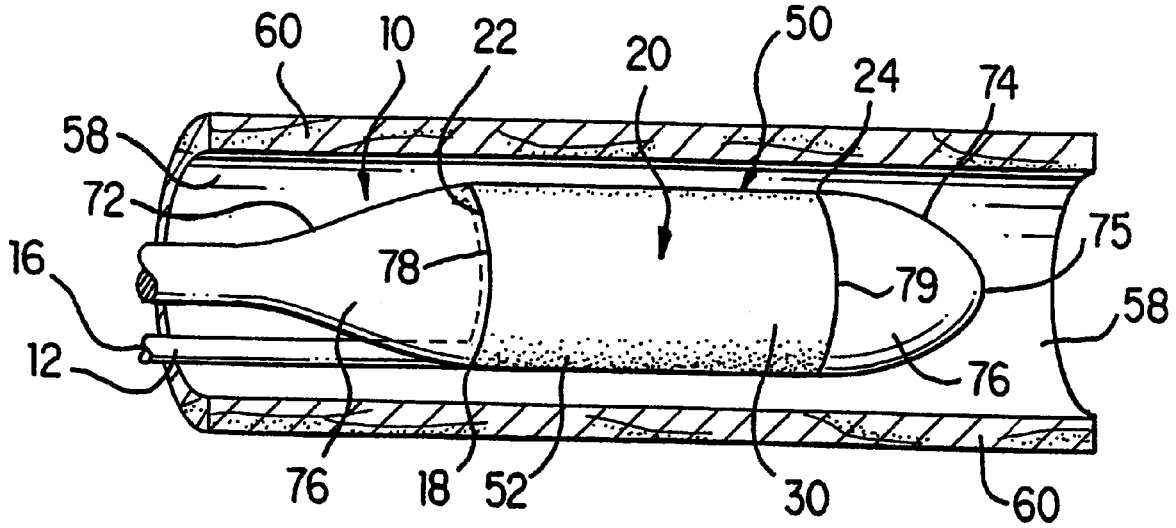
65 Claims, 7 Drawing Sheets