Jan. 29, 1957 D. G. FORESTA ET AL 2,779,307

ADHESIVE APPLICATOR FOR WALL JOINT TAPES

Filed April 1, 1955 2 Sheets-Sheet 1

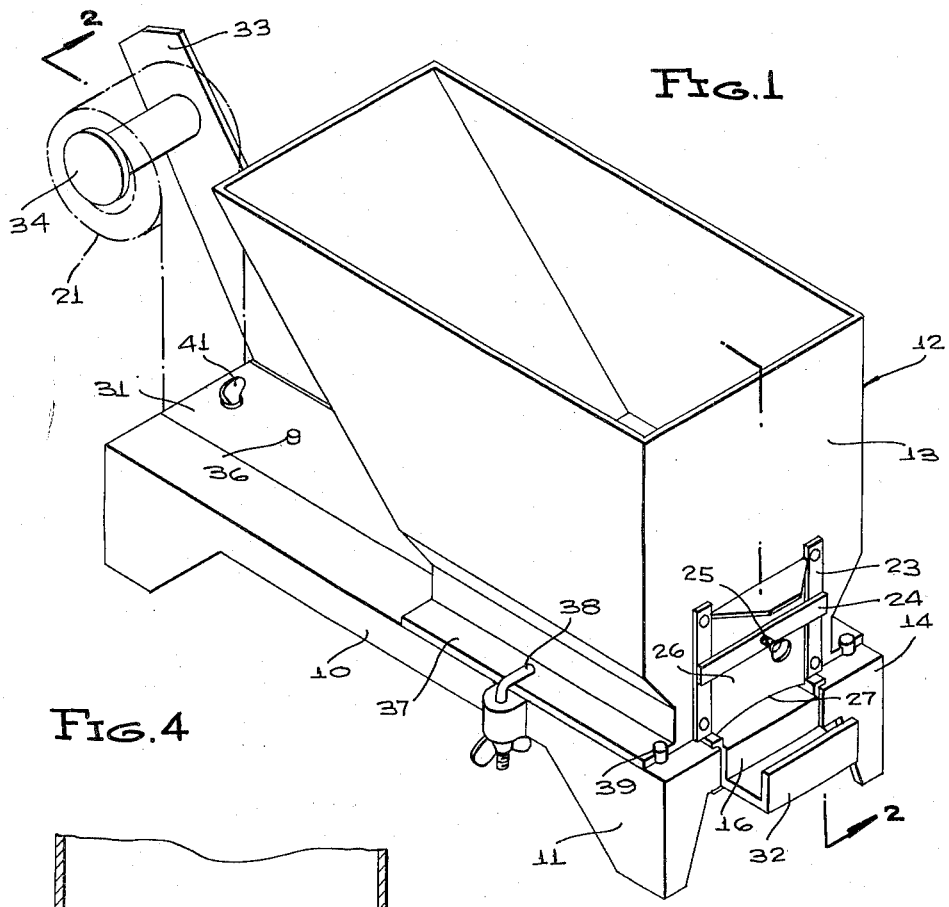

FIG. 1

FIG. 4

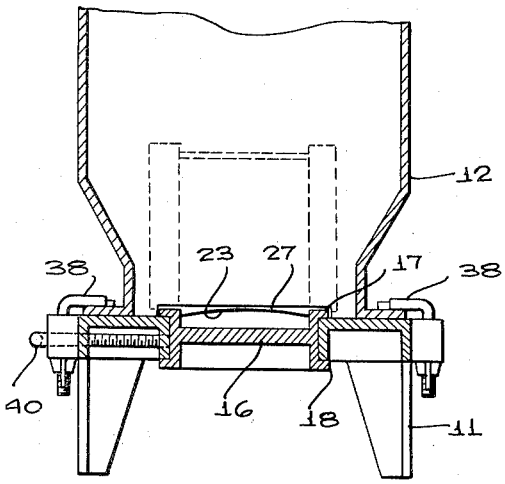

FIG. 5

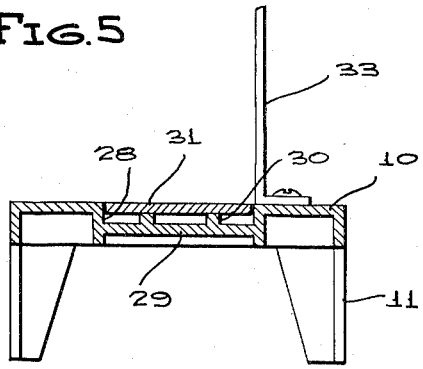

INVENTORS
DOMINICK G. FORESTA
& WILLIAM LEVIN
BY

McMorrow, Berman + Davidson
ATTORNEYS