SURGICAL DEVICES FOR KERATOPLASTY AND METHODS THEREOF

Filed Sept. 17, 1956 4 Sheets-Sheet 1

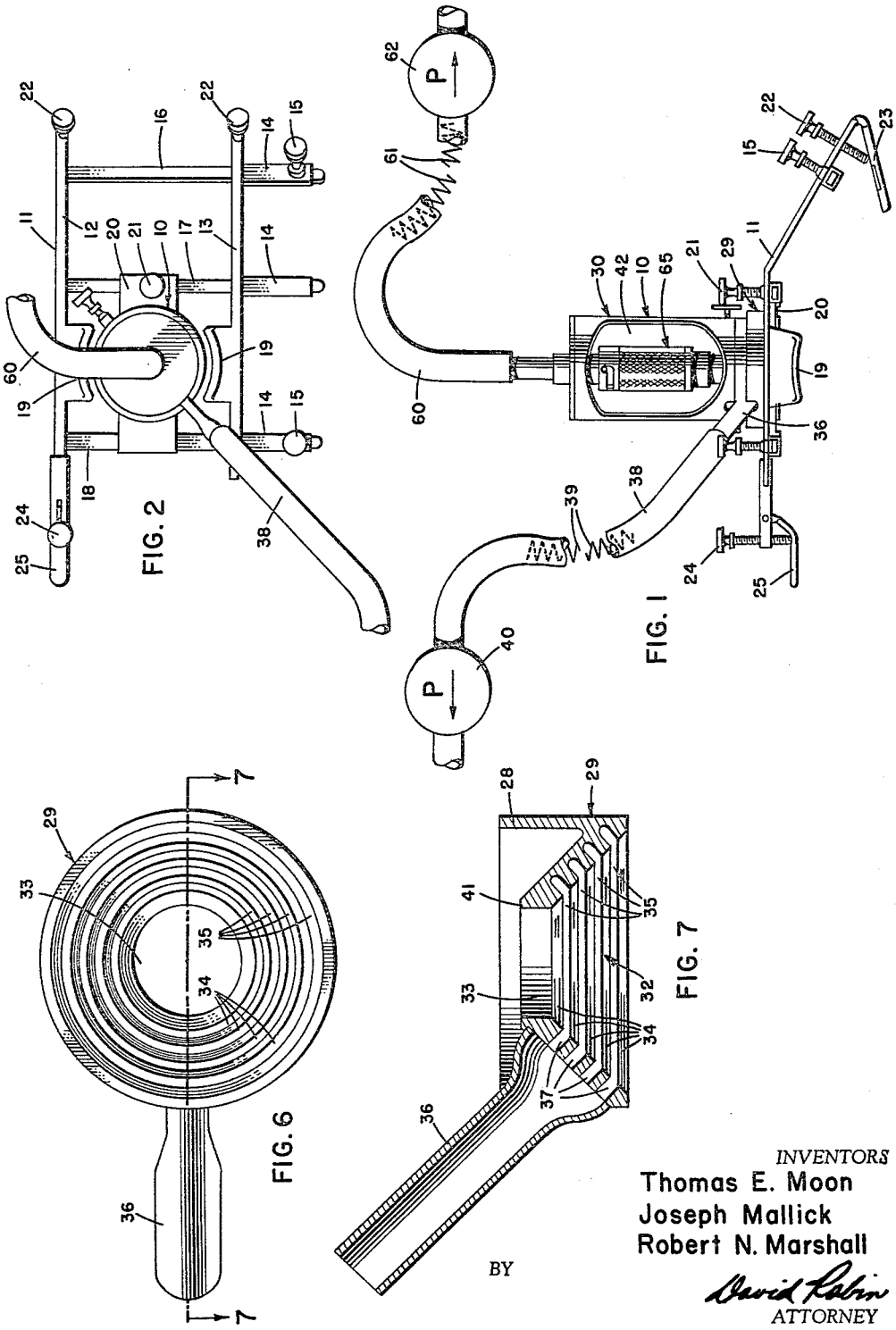

INVENTORS
Thomas E. Moon
Joseph Mallick
Robert N. Marshall
BY David Rabin
ATTORNEY