MULTI-ELEMENT ELECTRO-OPTIC CRYSTAL SHUTTER

Filed Jan. 11, 1960 3 Sheets-Sheet 1

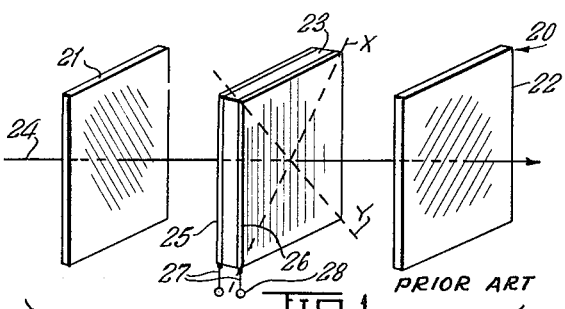

FIG. 1.

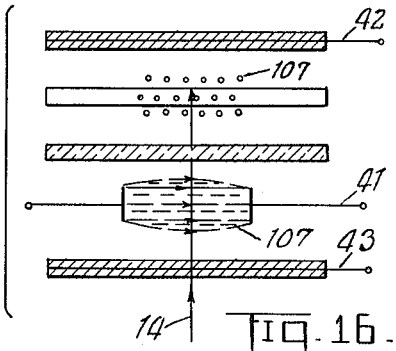

FIG. 1b.

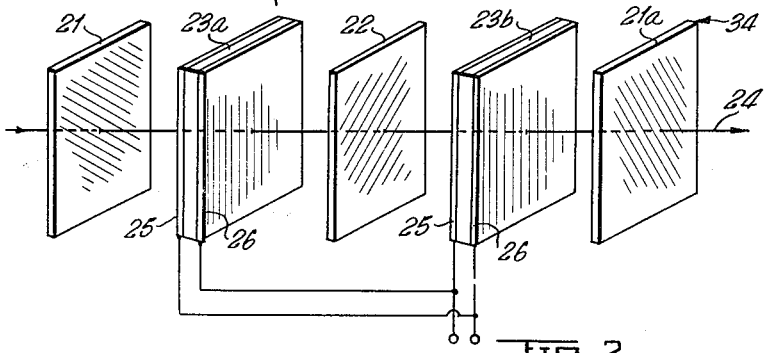

FIG. 2.

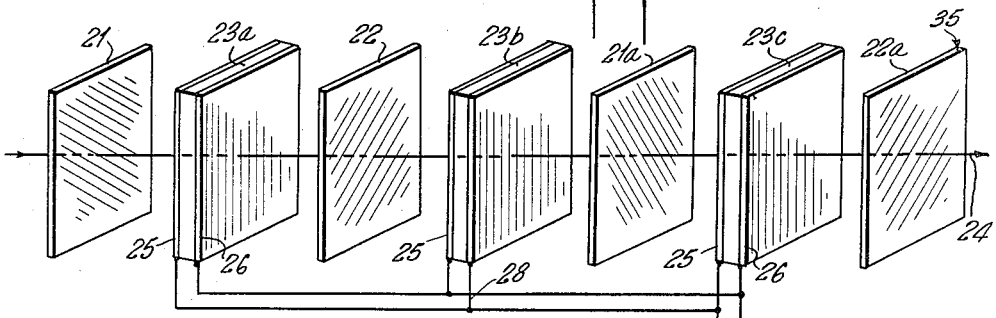

FIG. 3.

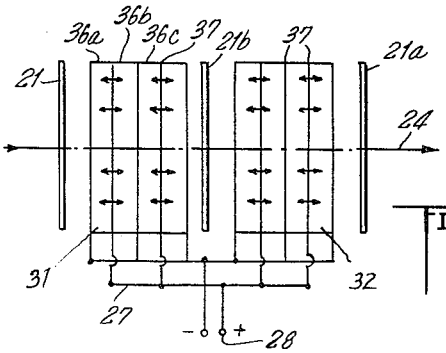

FIG. 4.

INVENTORS
ALVIN M. MARKS
MORTIMER M. MARKS
BY Albert F. Kroman
ATTORNEY