US007663607B2

(12) **United States Patent**
Hotelling et al.

(10) **Patent No.: US 7,663,607 B2**
(45) **Date of Patent: Feb. 16, 2010**

(54) **MULTIPOINT TOUCHSCREEN**

(75) Inventors: **Steve Hotelling**, San Jose, CA (US); **Joshua A. Strickon**, San Jose, CA (US); **Brian Q. Huppi**, San Francisco, CA (US)

(73) Assignee: **Apple Inc.**, Cupertino, CA (US)

(*) Notice: Subject to any disclaimer, the term of this patent is extended or adjusted under 35 U.S.C. 154(b) by 754 days.

(21) Appl. No.: **10/840,862**

(22) Filed: **May 6, 2004**

(65) **Prior Publication Data**

US 2006/0097991 A1 May 11, 2006

(51) **Int. Cl.**
G06F 3/041 (2006.01)

(52) **U.S. Cl.** **345/173**; 345/174; 178/18.01

(58) **Field of Classification Search** 345/173–179; 178/18.01–18.04

See application file for complete search history.

(56) **References Cited**

U.S. PATENT DOCUMENTS

3,333,160	A	7/1967	Gorski	
3,541,541	A	11/1970	Englebart	
3,662,105	A	5/1972	Hurst et al.	178/18
3,798,370	A	3/1974	Hurst	178/18
4,246,452	A	1/1981	Chandler	200/5
4,550,221	A	10/1985	Mabusth	178/18
4,672,364	A	6/1987	Lucas	340/365 P
4,672,558	A	6/1987	Beckes et al.	364/518
4,692,809	A	9/1987	Beining et al.	358/247
4,695,827	A	9/1987	Beining et al.	340/365 P
4,733,222	A	3/1988	Evans	340/365 C
4,734,685	A	3/1988	Watanabe	340/710
4,746,770	A	5/1988	McAvinney	178/18
4,771,276	A	9/1988	Parks	340/712
4,788,384	A	11/1988	Bruere-Dawson et al.	178/18
4,806,846	A	2/1989	Kerber	324/60 CD
4,898,555	A	2/1990	Sampson	445/22
4,914,624	A	4/1990	Dunthorn et al.	
4,968,877	A	11/1990	McAvinney et al.	250/221
5,003,519	A	3/1991	Noirjean	368/73
5,017,030	A	5/1991	Crews	400/485
5,178,477	A	1/1993	Gambaro	400/489
5,189,403	A	2/1993	Franz et al.	340/711
5,194,862	A	3/1993	Edwards	341/20
5,224,861	A	7/1993	Glass et al.	434/35
5,241,308	A	8/1993	Young	341/34

(Continued)

FOREIGN PATENT DOCUMENTS

CA	1243096	10/1988	340/180

(Continued)

OTHER PUBLICATIONS

U.S. Appl. No. 10/654,108, filed Sep. 2, 2003.

(Continued)

Primary Examiner—Richard Hjerpe
Assistant Examiner—Kimnhung Nguyen
(74) *Attorney, Agent, or Firm*—Morrison & Foerster LLP

(57) **ABSTRACT**

A touch panel having a transparent capacitive sensing medium configured to detect multiple touches or near touches that occur at the same time and at distinct locations in the plane of the touch panel and to produce distinct signals representative of the location of the touches on the plane of the touch panel for each of the multiple touches is disclosed.
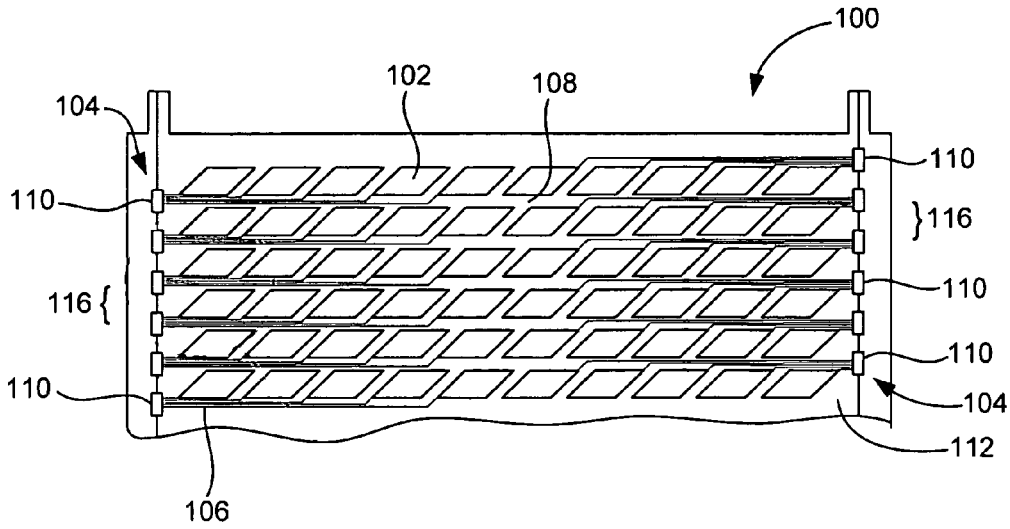
11 Claims, 14 Drawing Sheets