# United States Patent

**Banko**

[15] **3,659,607**

[45] **May 2, 1972**


[54] **METHOD FOR PERFORMING SURGICAL PROCEDURES ON THE EYE**


[72] Inventor: **Anton Banko,** Brooklyn, N.Y.

[73] Assignee: **Surgical Design Corporation,** Long Island, N.Y.



[22] Filed: **Apr. 6, 1970**

[21] Appl. No.: **25,669**

**Related U.S. Application Data**

[62] Division of Ser. No. 762,286, Sept. 16, 1968, Pat. No. 3,528,425.

[52] **U.S. Cl.** .....**128/305**

[51] **Int. Cl.** .....**A61b 17/32**

[58] **Field of Search** .....128/1 R, 303, 305, 329, 347



[56] **References Cited**

UNITED STATES PATENTS

| | | | |
|---|---|---|---|
| 916,441 | 3/1909 | Hachmann | 128/347 UX |
| 3,039,468 | 6/1962 | Price | 128/329 X |
| 3,074,407 | 1/1963 | Moon et al. | 128/303 |
| 3,458,870 | 8/1969 | Stone, Jr. | 3/13 |



*Primary Examiner*—Channing L. Pace
*Attorney*—Darby & Darby



[57] **ABSTRACT**

The method relates to performing surgical procedures on the eye in vivo, including forming of an opening therein to permit the insertion of instrumentation within the eye for various procedures.

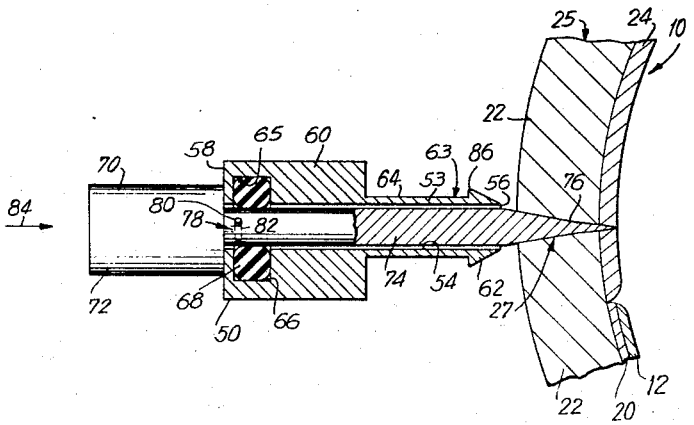
**16 Claims, 14 Drawing Figures**