United States Patent [19]

Davis

[11] **Patent Number: 4,958,907**

[45] **Date of Patent: Sep. 25, 1990**

[54] **COMPUTER SCREEN MAGNIFIER**

[76] Inventor: **Dale G. Davis,** 8228 Paige, Warren, Mich. 48089

[21] Appl. No.: **297,038**

[22] Filed: **Jan. 17, 1989**

[51] **Int. Cl.**[5] **G02B 7/02**

[52] **U.S. Cl.** **350/243;** 248/298; 248/316.5; 248/918

[58] **Field of Search** 350/241, 243, 245; 358/250; 248/316.1, 316.5, 316.7, 298, 918

[56] **References Cited**

U.S. PATENT DOCUMENTS

2,454,857	11/1948	Bish	248/316.5
3,168,276	2/1965	Schneider	248/316.7
3,545,805	12/1970	Wilson	248/316.5
4,051,535	9/1977	Inglis	350/243
4,379,618	4/1983	Tall	350/239
4,712,870	12/1987	Robinson et al.	350/245

Primary Examiner—Bruce Y. Arnold
Assistant Examiner—Ronald M. Kachmarik
Attorney, Agent, or Firm—Krass & Young

[57] **ABSTRACT**

A holder for adjustably positioning a flatsheet magnifier proximate a visual display terminal comprises a mounting for retaining the magnifier and a support for extensibly positioning the mounting in a predetermined, spaced-apart relationship with the terminal. Disclosed are particular arrangements of mounts and supports including slidable members, telescopic legs and pivoting, scissor-action legs, all of which provide for the positioning of a magnifier proximate a display screen.
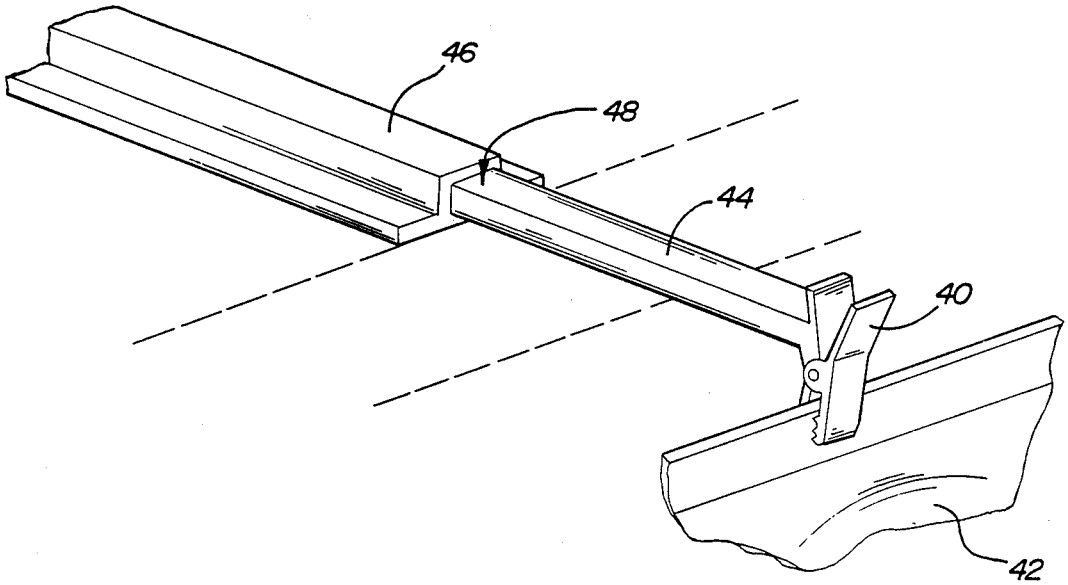
4 Claims, 2 Drawing Sheets