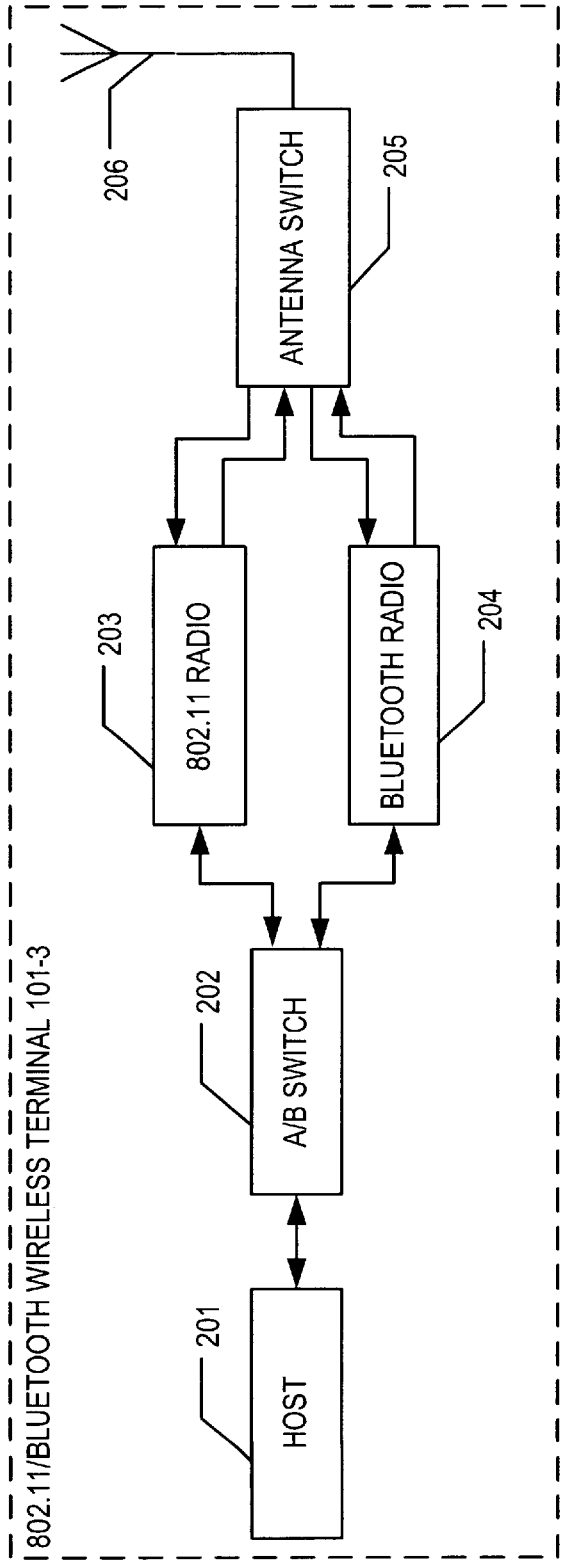

FIG. 2
(PRIOR ART)