Sept. 19, 1933. C. A. SABBAH 1,927,807

SPACE DISCHARGE APPARATUS

Filed Sept. 22, 1926

Fig. 1.

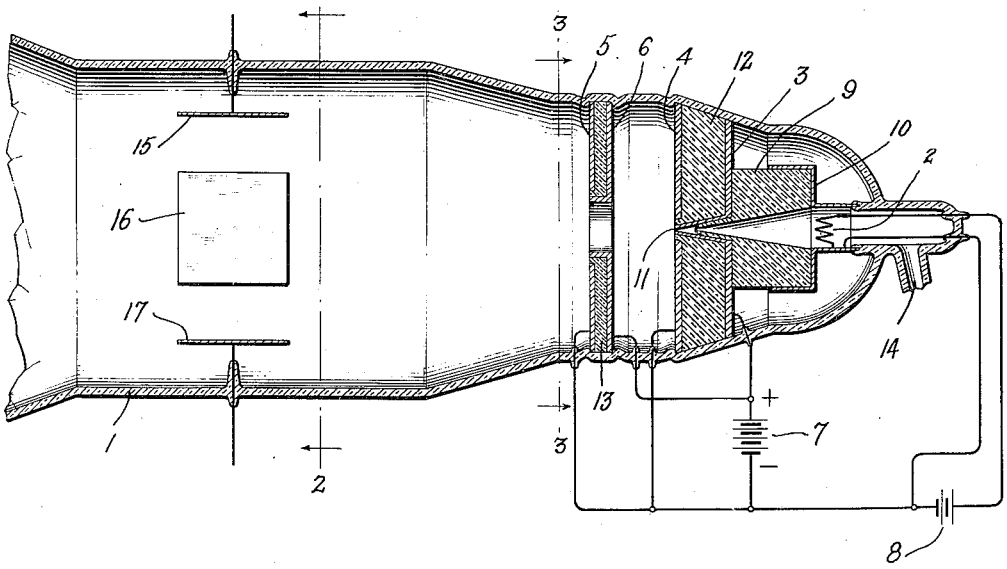

Fig. 2.

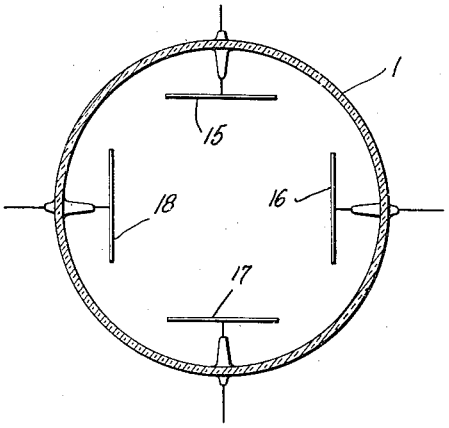

Fig. 3.

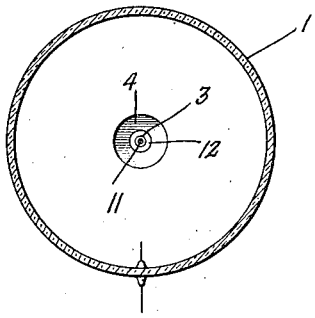

Inventor:
Camille A. Sabbah,
by Alexander F. Lent
His Attorney.