US009125807B2

(12) **United States Patent**
Sawhney et al.

(10) **Patent No.: US 9,125,807 B2**
(45) **Date of Patent: Sep. 8, 2015**

(54) **ADHESIVE HYDROGELS FOR OPHTHALMIC DRUG DELIVERY**

(75) Inventors: **Amarpreet S. Sawhney**, Lexington, MA (US); **William H. Ransone, II**, Waltham, MA (US)

(73) Assignee: **Incept LLC**, Lexington, MA (US)

(*) Notice: Subject to any disclaimer, the term of this patent is extended or adjusted under 35 U.S.C. 154(b) by 379 days.

(21) Appl. No.: **11/825,848**

(22) Filed: **Jul. 9, 2007**

(65) **Prior Publication Data**

US 2009/0017097 A1 Jan. 15, 2009

(51) **Int. Cl.**

A61K 47/10	(2006.01)
A61K 9/00	(2006.01)
A61K 31/196	(2006.01)
A61K 31/405	(2006.01)
A61K 31/4422	(2006.01)
A61K 31/4458	(2006.01)
A61K 31/496	(2006.01)
A61K 31/573	(2006.01)
A61K 31/58	(2006.01)

(52) **U.S. Cl.**

CPC ***A61K 9/0051*** (2013.01); ***A61K 31/196*** (2013.01); ***A61K 31/405*** (2013.01); ***A61K 31/4422*** (2013.01); ***A61K 31/4458*** (2013.01); ***A61K 31/496*** (2013.01); ***A61K 31/573*** (2013.01); ***A61K 31/58*** (2013.01); ***A61K 47/10*** (2013.01)

(58) **Field of Classification Search**

None

See application file for complete search history.

(56) **References Cited**

U.S. PATENT DOCUMENTS

3,949,750	A		4/1976	Freeman
3,995,635	A	*	12/1976	Higuchi et al. 424/427
4,424,311	A		1/1984	Nagaoka et al.
4,693,887	A		9/1987	Shah
4,740,534	A		4/1988	Matsuda et al.
4,741,872	A		5/1988	DeLuca et al.
4,760,131	A		7/1988	Sundsmo et al.
4,803,075	A		2/1989	Wallace et al.
4,826,945	A		5/1989	Cohn et al.
4,938,763	A		7/1990	Dunn et al.
4,952,581	A		8/1990	Bio et al.
4,979,959	A		12/1990	Guire
5,041,292	A		8/1991	Feijen
5,100,992	A		3/1992	Cohn et al.
5,122,614	A		6/1992	Zalipsky

(Continued)

FOREIGN PATENT DOCUMENTS

EP	1 704 878 A2	9/2006
WO	97/19973 A1	6/1997

(Continued)

OTHER PUBLICATIONS

Neises B., Steglich W. "Esterification of Carboxylic Acids with Dicyclohexylcarbodiimide/4-Dimethylaminopyridine: tert-Butyl Ethyl Fumarate." Organic Syntheses, Coll. vol. 7 p. 93 (1990). vol. 63, p. 183 (1985).*

(Continued)

Primary Examiner — Isaac Shomer

(74) *Attorney, Agent, or Firm* — Dardi & Herbert, PLLC; Curtis B. Herbert

(57) **ABSTRACT**

Some aspects of this disclosure relate to a method of treating an opthalmic disease affecting an eye of a patient comprising forming a covalently-crosslinked hydrogel in situ at a peri-ocular, intra-ocular, or intra-vitreal site for controlled release of a therapeutic agent.
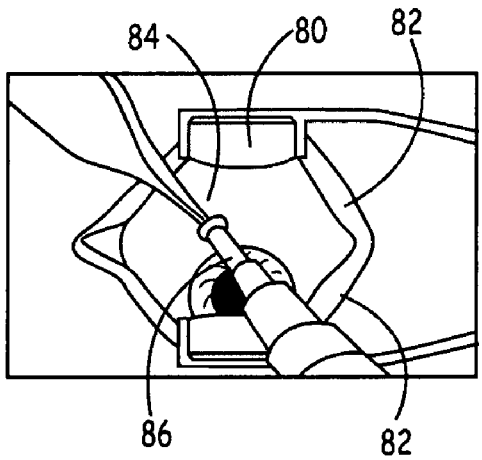
30 Claims, 14 Drawing Sheets