TELEPHONE-TELEVISION SUBSTATION APPARATUS

Filed July 25, 1967 2 Sheets-Sheet 1

FIG. 1

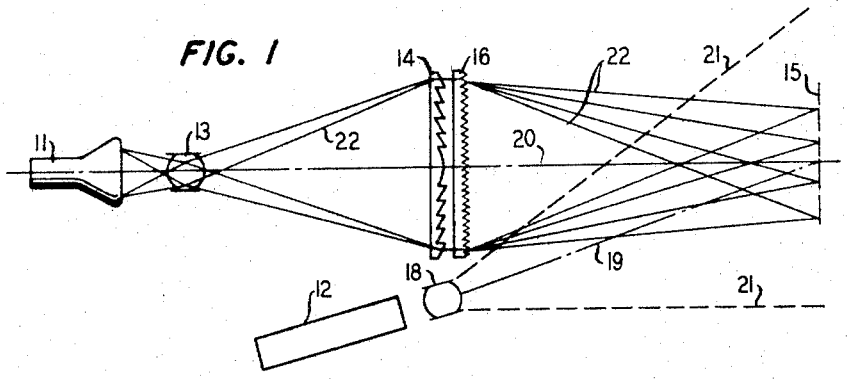

FIG. 2

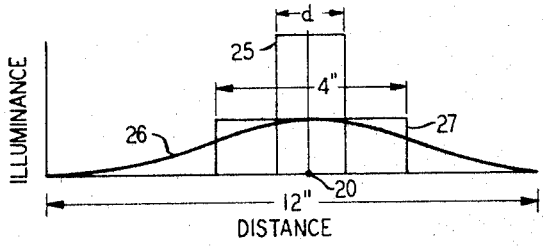

FIG. 5

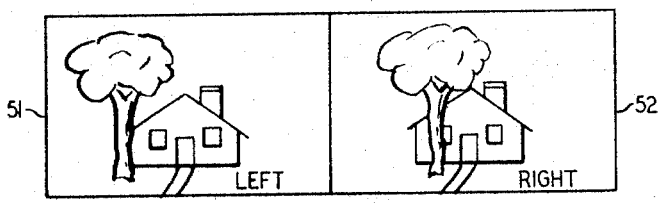

FIG. 6

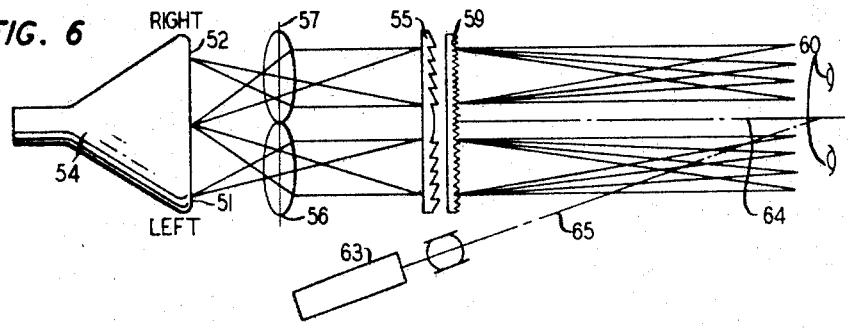

FIG. 7

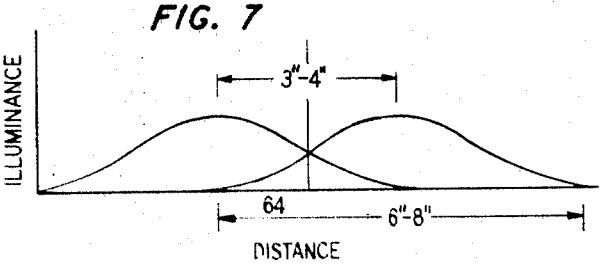

INVENTORS
D. R. HERRIOTT
K. M. POOLE
BY Arthur J. Torsiglieri
ATTORNEY