US005323907A

United States Patent [19]

Kalvelage

[11] **Patent Number: 5,323,907**

[45] **Date of Patent: Jun. 28, 1994**

[54] **CHILD RESISTANT PACKAGE ASSEMBLY FOR DISPENSING PHARMACEUTICAL MEDICATIONS**

[75] Inventor: **John D. Kalvelage**, Lynchburg, Va.

[73] Assignee: **Multi-Comp, Inc.**, Lynchburg, Va.

[21] Appl. No.: **31,657**

[22] Filed: **Mar. 15, 1993**

Related U.S. Application Data

[63] Continuation of Ser. No. 902,985, Jun. 23, 1992, abandoned.

[51] **Int. Cl.**[5] **A61J 1/00**

[52] **U.S. Cl.** **206/531**; 206/534; 206/539

[58] **Field of Search** 206/528-540, 206/461-471

[56] **References Cited**

U.S. PATENT DOCUMENTS

Re. 29,705	7/1978	Compere .	
D. 322,934	1/1992	Kalvelage .	
D. 323,109	1/1992	Kalvelage .	
2,809,863	10/1957	Curran .	
3,173,540	3/1965	Lapides .	
3,397,671	8/1968	Hartman, Jr. et al. .	
3,494,322	2/1970	Dubbels .	
3,503,493	3/1970	Nagy .	
3,603,453	9/1971	Serrell et al. .	
3,780,856	12/1973	Braverman .	
3,856,144	12/1974	Kelly .	
3,921,805	11/1975	Compere .	
3,924,746	12/1975	Haines .	
3,924,747	12/1975	Gerner .	
3,948,394	4/1976	Hellstrom .	
4,106,621	8/1978	Sorensen .	
4,125,190	11/1978	Davie, Jr. et al. .	
4,211,326	7/1980	Hein et al. .	
4,231,477	11/1980	De Felice .	
4,254,871	3/1981	Poore .	
4,340,141	7/1982	Fischer .	
4,416,375	11/1983	Braverman et al. .	
4,429,792	2/1984	Machbitz .	
4,444,310	4/1984	Odell .	
4,506,789	3/1985	Dlugosz .	
4,537,312	8/1985	Intini .	
4,958,736	9/1990	Urheim	206/531
4,988,004	1/1991	Intini .	
5,014,851	5/1991	Wick .	
5,019,125	5/1991	Rebne et al.	206/532
5,046,618	9/1991	Wood .	
5,050,739	9/1991	Hannan et al.	206/534

Primary Examiner—Jimmy G. Foster

Attorney, Agent, or Firm—Bell, Seltzer, Park & Gibson

[57] **ABSTRACT**

The present invention includes a package assembly which comprises a blister package and a surrounding frame having a child resistant feature. The blister package includes a blister sheet having blisters that form recesses adapted for receiving medications and a lidding sheet overlying the face of the blister sheet for enclosing medications in the blister recesses. The surrounding frame is designed for receiving and supporting the blister package and is made up of first and second panels. The apertures in each panel are correspondingly arranged so as to overlap in an opposing face-to-face relation. The apertures in the second panel are configured to partially obstruct the corresponding aperture in the first panel. The partial obstruction thereby forming a protective device to impede unwanted removal of medication from the blister package in a child resistant fashion.
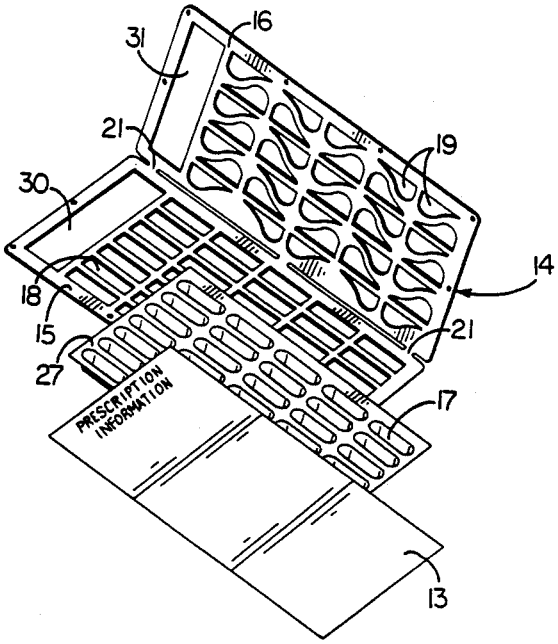
17 Claims, 5 Drawing Sheets