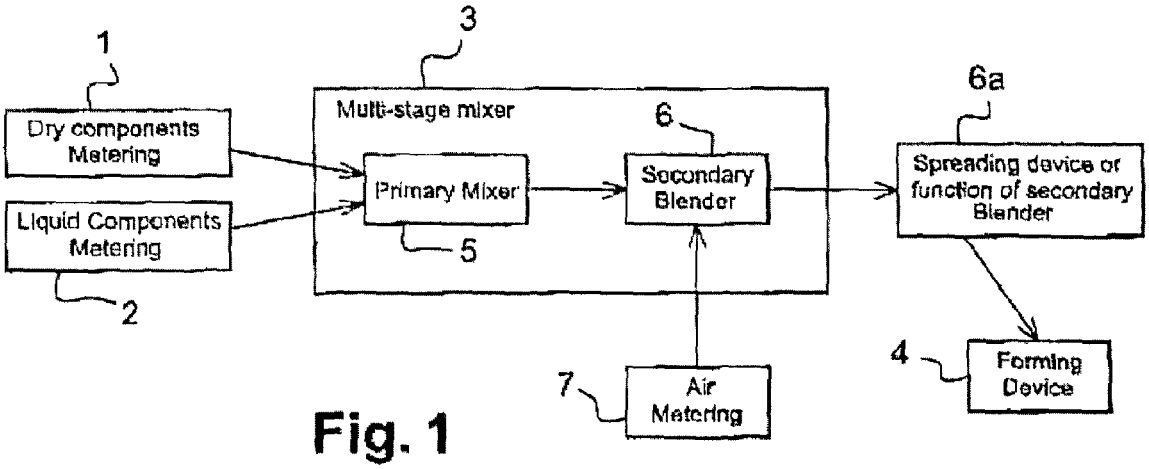
1
Dry components Metering
Liquid Components Metering
2
3
Multi-stage mixer
Primary Mixer
5
6
Secondary Blender
7
Air Metering
6a
Spreading device or function of secondary Blender
4
Forming Device

Fig. 1

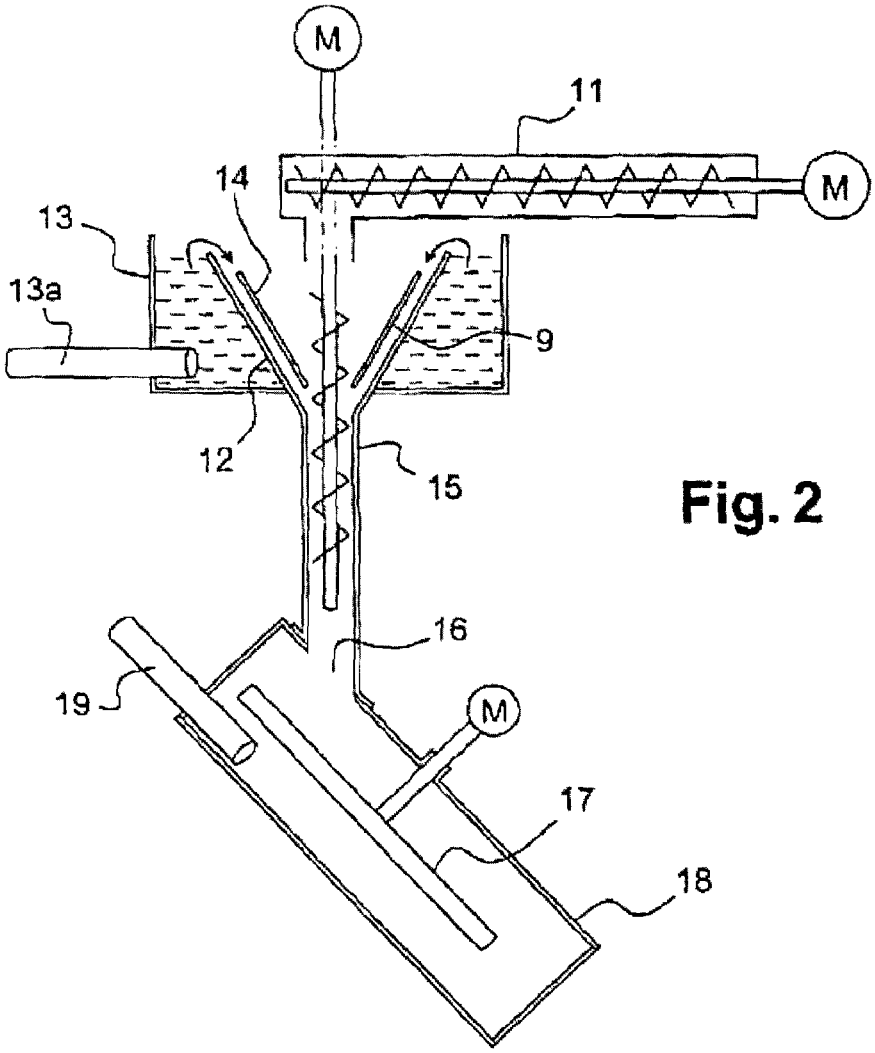
M
11
M
14
13
13a
9
12
15
16
19
M
17
18

Fig. 2