US008216307B2

(12) **United States Patent**
Schaper, Jr.

(10) **Patent No.: US 8,216,307 B2**
(45) **Date of Patent: Jul. 10, 2012**

(54) **RADIALLY SEGMENTED APODIZED DIFFRACTIVE MULTIFOCAL DESIGN FOR OCULAR IMPLANT**

(75) Inventor: **Dale T. Schaper, Jr.**, Lakeside, TX (US)

(73) Assignee: **Novartis AG**, Basel (CH)

(*) Notice: Subject to any disclaimer, the term of this patent is extended or adjusted under 35 U.S.C. 154(b) by 346 days.

(21) Appl. No.: **12/614,752**

(22) Filed: **Nov. 9, 2009**

(65) **Prior Publication Data**

US 2010/0161048 A1 Jun. 24, 2010

Related U.S. Application Data

(60) Provisional application No. 61/139,119, filed on Dec. 19, 2008.

(51) **Int. Cl.**
A61F 2/16 (2006.01)

(52) **U.S. Cl.** **623/6.29**; 623/6.27; 623/6.3

(58) **Field of Classification Search** ..... None
See application file for complete search history.

(56) **References Cited**

U.S. PATENT DOCUMENTS

4,162,122	A	7/1979	Cohen
4,210,391	A	7/1980	Cohen
4,338,005	A	7/1982	Cohen
4,340,283	A	7/1982	Cohen
4,637,697	A	1/1987	Freeman
4,641,934	A	2/1987	Freeman
4,642,112	A	2/1987	Freeman
4,655,565	A	4/1987	Freeman
4,881,804	A	11/1989	Cohen
4,881,805	A	11/1989	Cohen
4,888,012	A	12/1989	Horn et al.
4,995,714	A	2/1991	Cohen
4,995,715	A	2/1991	Cohen
5,017,000	A	5/1991	Cohen
5,054,905	A	10/1991	Cohen
5,056,908	A	10/1991	Cohen
5,076,684	A	12/1991	Simpson et al.
5,096,285	A	3/1992	Silberman
5,116,111	A	5/1992	Simpson et al.
5,117,306	A	5/1992	Cohen
5,120,120	A	6/1992	Cohen
5,121,979	A	6/1992	Cohen
5,121,980	A	6/1992	Cohen
5,129,718	A	7/1992	Futhey et al.
5,144,483	A	9/1992	Cohen
5,217,489	A	6/1993	Van Noy et al.
5,257,132	A	10/1993	Ceglio et al.
5,470,932	A	11/1995	Jinkerson
5,528,322	A	6/1996	Jinkerson

(Continued)

FOREIGN PATENT DOCUMENTS

CA	2602507	A1	9/2006

(Continued)

Primary Examiner — David H Willse
Assistant Examiner — Javier Blanco
(74) *Attorney, Agent, or Firm* — Jonathan E. Prejean

(57) **ABSTRACT**

A radially segmented apodized diffractive multifocal IOL for ocular implant is provided. The ocular implant can comprise a radially segmented apodized diffractive multifocal intraocular lens optic and a number of haptics. The radially segmented apodized diffractive multifocal IOL may pass optical energy in both photopic and mesopic conditions. The radially segmented apodized diffractive multifocal IOL includes a number of radially segmented apodization zones, each radially segmented apodization zones having a unique focal length. The haptics mechanically couple to the apodized diffractive multifocal IOL optic in order to position and secure the apodized diffractive multifocal IOL within the eye. The radially segmented apodized diffractive multifocal IOL may include both a diffractive region and a refractive region.
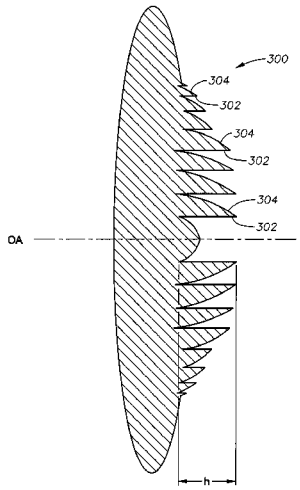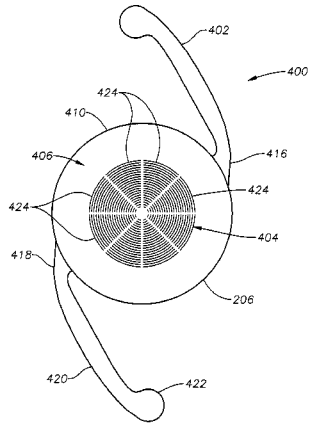
3 Claims, 6 Drawing Sheets