US009214507B2

(12) **United States Patent**
Mathew et al.

(10) **Patent No.: US 9,214,507 B2**
(45) **Date of Patent: Dec. 15, 2015**

(54) **NARROW BORDER ORGANIC LIGHT-EMITTING DIODE DISPLAY**

(75) Inventors: **Dinesh C. Mathew**, Fremont, CA (US); **Adam T. Garelli**, Santa Clara, CA (US); **Paul S. Drzaic**, Morgan Hill, CA (US); **Wei Chen**, Palo Alto, CA (US); **Brett W. Degner**, Menlo Park, CA (US); **Bryan W. Posner**, La Selva Beach, CA (US)

(73) Assignee: **Apple Inc.**, Cupertino, CA (US)

(*) Notice: Subject to any disclaimer, the term of this patent is extended or adjusted under 35 U.S.C. 154(b) by 469 days.

(21) Appl. No.: **13/588,831**

(22) Filed: **Aug. 17, 2012**

(65) **Prior Publication Data**

US 2014/0049522 A1 Feb. 20, 2014

(51) **Int. Cl.**

H01J 1/62	(2006.01)
H01L 27/32	(2006.01)
G06F 3/041	(2006.01)
H05B 33/08	(2006.01)
H01L 51/52	(2006.01)

(52) **U.S. Cl.**

CPC ***H01L 27/3276*** (2013.01); ***G06F 3/041*** (2013.01); ***H05B 33/0896*** (2013.01); *H01L 51/5281* (2013.01); *H03K 2217/96031* (2013.01)

(58) **Field of Classification Search**

CPC H01L 27/3244
USPC 313/506, 512, 504
See application file for complete search history.

(56) **References Cited**

U.S. PATENT DOCUMENTS

4,066,855	A	1/1978	Zenk
4,085,302	A	4/1978	Zenk et al.
4,487,993	A	12/1984	Becker
5,276,382	A	1/1994	Stocker et al.
5,436,744	A	7/1995	Arledge et al.
5,483,261	A	1/1996	Yasutake

(Continued)

FOREIGN PATENT DOCUMENTS

CN	101106157	1/2008
CN	102437405	5/2012

(Continued)

OTHER PUBLICATIONS

Martisauskas et al., U.S. Appl. No. 13/229,120, filed Sep. 9, 2011.

Primary Examiner — Vip Patel
(74) *Attorney, Agent, or Firm* — Treyz Law Group; G. Victor Treyz; Kendall P. Woodruff

(57) **ABSTRACT**

An electronic device may be provided having an organic light-emitting diode display and control circuitry for operating the display. The display may include one or more display layers interposed between the control circuitry and a display layer having thin-film transistors. The electronic device may include a coupling structure interposed between the layer of thin-film transistors and the control circuitry that electrically couples the layer of thin-film transistors to the control circuitry. The coupling structure may include a dielectric member having a conductive via, a flexible printed circuit having a bent portion, or a conductive via formed in an encapsulation layer of the display. The display may include a layer of opaque masking material. The layer of opaque masking material may be formed on an encapsulation layer, an organic emissive layer, a thin-film transistor layer, or a glass layer of the organic light-emitting diode display.
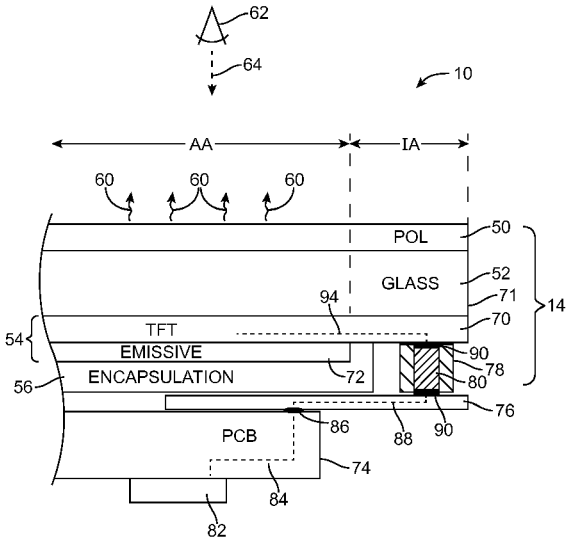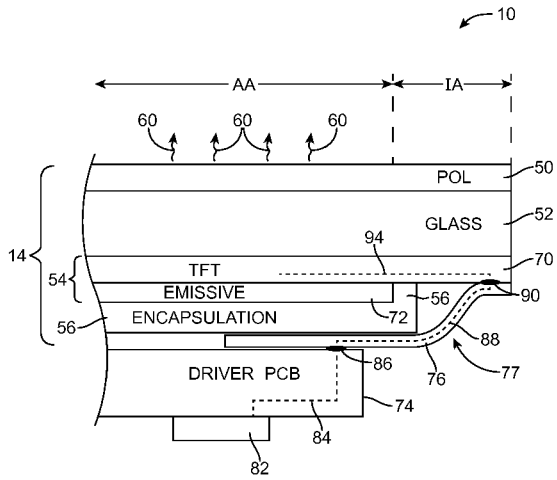
24 Claims, 9 Drawing Sheets