US005713907A

United States Patent [19]

Hogendijk et al.

[11] Patent Number: 5,713,907

[45] Date of Patent: Feb. 3, 1998

[54] **APPARATUS AND METHOD FOR DILATING A LUMEN AND FOR INSERTING AN INTRALUMINAL GRAFT**

[75] Inventors: **Michael Hogendijk**, Santa Clara, Calif.; **Mark H. Wholey**, Allegheny County, Pa.

[73] Assignee: **Endotex Interventional Systems, Inc.**, Menlo Park, Calif.

[21] Appl. No.: **504,820**

[22] Filed: **Jul. 20, 1995**

[51] **Int. Cl.**[6] **A61M 29/00**

[52] **U.S. Cl.** **606/108**; 606/198

[58] **Field of Search** 606/198, 108; 604/105, 106, 107, 108

[56] **References Cited**

U.S. PATENT DOCUMENTS

1,433,031	10/1922	Pegaitaz	606/198
3,557,794	1/1971	Van Patten	606/198
3,667,474	6/1972	Lapkin et al.	606/198
3,874,388	4/1975	King et al. .	
3,996,938	12/1976	Clark	606/198 X
4,562,596	1/1986	Kornberg .	
4,585,000	4/1986	Hershenson .	
4,733,665	3/1988	Palmaz .	
4,739,762	4/1988	Palmaz .	
4,776,337	10/1988	Palmaz .	
4,820,298	4/1989	Leveen et al. .	
4,998,539	3/1991	Delsanti	606/198
5,002,560	3/1991	Machold et al.	606/198
5,151,105	9/1992	Kwan-Gett .	
5,279,565	1/1994	Klein et al.	604/105
5,354,310	10/1994	Garnic et al.	606/198
5,456,667	10/1995	Ham et al.	606/198 X

Primary Examiner—Michael H. Thaler
Attorney, Agent, or Firm—Fish & Neave

[57] **ABSTRACT**

An insertion device for an intraluminal graft is provided, including a deployment catheter which has a deployment shaft and an expanding frame with an umbrella-like assembly. The assembly is suitable for radially expanding a graft. The device also includes a deployment grip connected to the deployment shaft. A coil interposed between the deployment grip and the expanding frame resiliently urges the expanding frame, with the deployment grip reversibly operating the expanding frame thereby. The deployment catheter collapses for removal from the vessel lumen after the intraluminal graft has been introduced therein. This intraluminal graft is deployed through a catheter and expanded in place to anchor the graft to the vessel wall. The expanding frame is then collapsed and withdrawn from the lumen. The insertion device also can be configured as an intraluminal dilation device that can be used to dilate a lumen and to ensnare an intraluminal object.
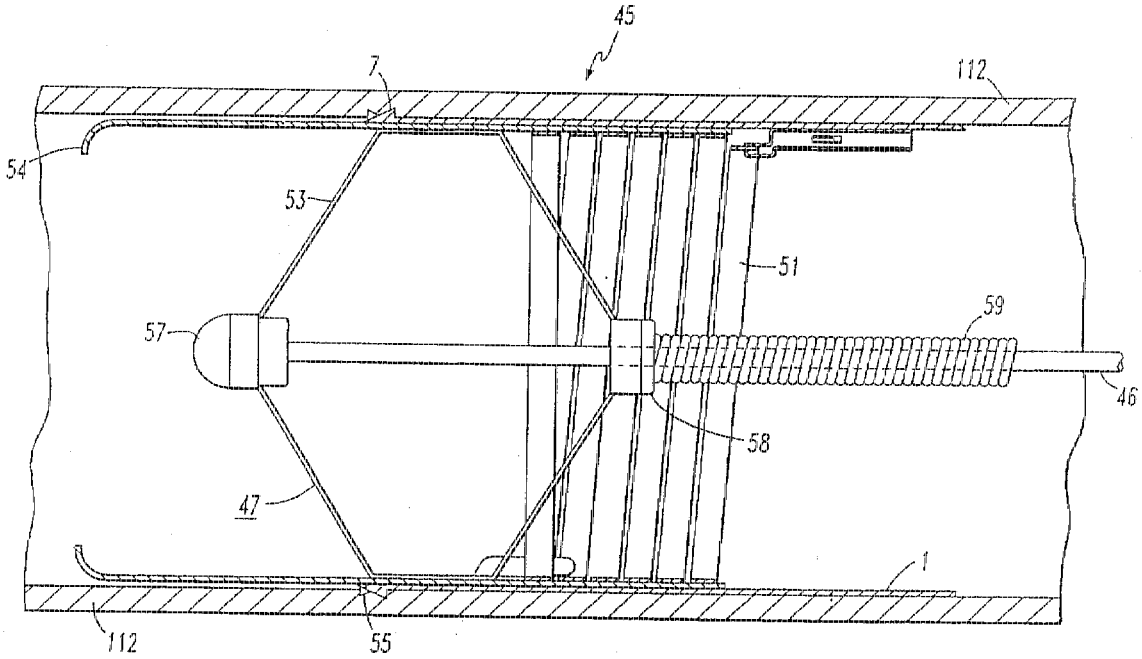
18 Claims, 11 Drawing Sheets