US009410607B2

(12) **United States Patent**
Yamamoto

(10) **Patent No.: US 9,410,607 B2**
(45) **Date of Patent: Aug. 9, 2016**

(54) **PULLEY UNIT**

(71) Applicant: **JTEKT CORPORATION**, Osaka-shi, Osaka (JP)

(72) Inventor: **Ikuo Yamamoto**, Kashiwara (JP)

(73) Assignee: **JTEKT CORPORATION**, Osaka-shi (JP)

(*) Notice: Subject to any disclaimer, the term of this patent is extended or adjusted under 35 U.S.C. 154(b) by 103 days.

(21) Appl. No.: **14/577,553**

(22) Filed: **Dec. 19, 2014**

(65) **Prior Publication Data**

US 2015/0192196 A1 Jul. 9, 2015

(30) **Foreign Application Priority Data**

Jan. 9, 2014 (JP) 2014-002314

(51) **Int. Cl.**

B62J 13/00	(2006.01)
F16D 1/00	(2006.01)
F16H 57/02	(2012.01)
F16H 55/36	(2006.01)
H02K 7/10	(2006.01)
F16D 41/06	(2006.01)
H02K 5/10	(2006.01)

(52) **U.S. Cl.**

CPC ***F16H 55/36*** (2013.01); ***F16D 41/06*** (2013.01); ***H02K 5/10*** (2013.01); ***H02K 7/1004*** (2013.01)

(58) **Field of Classification Search**

CPC . F16H 55/36; F16H 2055/366; F16D 41/206; F02B 67/06; F16C 13/006

USPC 474/70, 94, 144

See application file for complete search history.

(56) **References Cited**

U.S. PATENT DOCUMENTS

6,083,130	A *	7/2000	Mevissen	F02B 67/06 192/107 T
6,237,736	B1 *	5/2001	Ouchi	F16D 41/064 192/41 R
6,676,548	B2 *	1/2004	Fujiwara	F16H 7/20 192/41 R
7,011,593	B2 *	3/2006	Schenk	F16C 13/006 384/477
7,056,247	B2 *	6/2006	Fujiwara	F16D 41/067 474/166
7,182,707	B2 *	2/2007	Nakamura	F02B 67/06 290/4 C
7,201,685	B2 *	4/2007	Terada	F16C 33/7853 384/486
7,618,337	B2 *	11/2009	Jansen	F02B 67/06 192/41 S
7,909,717	B2 *	3/2011	Boussaguet	F16C 13/006 474/136
7,975,821	B2 *	7/2011	Antchak	F16D 7/022 192/41 S
8,012,053	B2 *	9/2011	Filip	F16C 13/006 474/144

(Continued)

FOREIGN PATENT DOCUMENTS

JP A-2003-232434 8/2003

Primary Examiner — Henry Liu

(74) *Attorney, Agent, or Firm* — Oliff PLC

(57) **ABSTRACT**

A pulley unit having a sleeve, a pulley and a cap member, wherein the cap member has an annular portion extending from a cover portion in an axial direction and fitted into a hexagon socket portion (polygonal inner peripheral portion), claw portions are formed to extend from the annular portion in the axial direction, and a peripheral surface of the annular portion is provided with first plane portions facing surfaces of the hexagon socket portion.
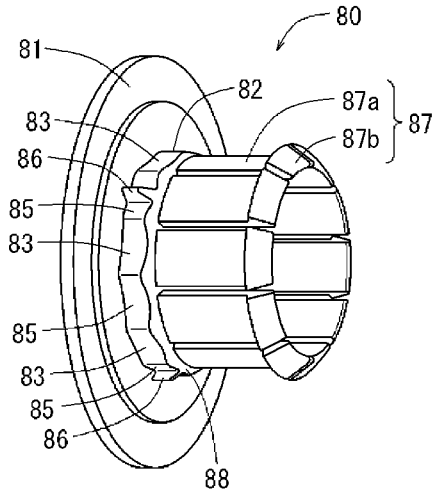
18 Claims, 6 Drawing Sheets