US009409807B2

(12) United States Patent
Larsen et al.

(10) Patent No.: US 9,409,807 B2
(45) Date of Patent: Aug. 9, 2016

(54) **USE OF PRIMARY SLUDGE FOR CARBON SOURCE IN AN AERATED-ANOXIC BIOREACTOR SYSTEM**

(71) Applicant: **Evoqua Water Technologies LLC**, Alpharetta, GA (US)

(72) Inventors: **Thomas J. Larsen**, Waukesha, WI (US); **Michael L. Doyle**, Wauwatosa, WI (US)

(73) Assignee: **Evoqua Water Technologies LLC**, Warrendale, PA (US)

(*) Notice: Subject to any disclaimer, the term of this patent is extended or adjusted under 35 U.S.C. 154(b) by 101 days.

(21) Appl. No.: **14/346,180**

(22) PCT Filed: **Sep. 25, 2012**

(86) PCT No.: **PCT/US2012/057086**

§ 371 (c)(1),
(2) Date: **Mar. 20, 2014**

(87) PCT Pub. No.: **WO2013/049046**

PCT Pub. Date: **Apr. 4, 2013**

(65) **Prior Publication Data**

US 2014/0217015 A1 Aug. 7, 2014

Related U.S. Application Data

(60) Provisional application No. 61/539,007, filed on Sep. 26, 2011.

(51) **Int. Cl.**
C02F 3/30 (2006.01)
C02F 3/00 (2006.01)
(Continued)

(52) **U.S. Cl.**
CPC ***C02F 3/307*** (2013.01); ***C02F 3/006*** (2013.01); ***C02F 3/308*** (2013.01); *C02F 1/38* (2013.01);
(Continued)

(58) **Field of Classification Search**
CPC C02F 3/307; C02F 1/38; C02F 1/42; C02F 1/441; C02F 1/444; C02F 1/4693; C02F 3/006; C02F 3/308; C02F 2209/001; C02F 2209/005; C02F 2209/08; C02F 2209/16; C02F 2209/40; C02F 2303/04; C02F 2303/24; C02F 2101/105; C02F 2101/16; C02F 2203/00; C02F 2209/36; Y02W 10/15
USPC 210/605, 610, 614, 620, 621, 622, 623, 210/252, 259
See application file for complete search history.

(56) **References Cited**

U.S. PATENT DOCUMENTS

4,999,111 A * 3/1991 Williamson C02F 3/04 210/605
6,129,104 A 10/2000 Ellard et al.
(Continued)

FOREIGN PATENT DOCUMENTS

WO 2009120384 A2 10/2009

OTHER PUBLICATIONS

Whittier et al., Siemens Water Academy Webinar, Aerated Anoxic Biological Processes, Jun. 22, 2011 [presentation online], [retrieved Nov. 27, 2012 from the internet] http://www.water.siemens.com/en/wastewater/pages/aerated-anoxic-webinar.aspx.*
(Continued)

Primary Examiner — Fred Prince

(57) **ABSTRACT**

A method and system of treating wastewater using primary sludge is disclosed. The treatment system includes a primary separator that separates a carbon source comprising non-solubilized suspended carbon from a source of wastewater. The non-solubilized suspended carbon is solubilized and used as a source of carbon in an aerated anoxic treatment system.
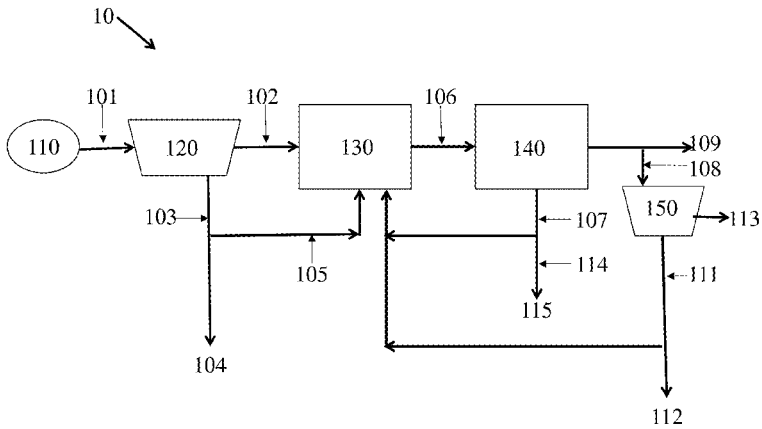
20 Claims, 2 Drawing Sheets