US009409607B2

(12) **United States Patent**
Osten

(10) **Patent No.: US 9,409,607 B2**
(45) **Date of Patent: Aug. 9, 2016**

(54) **COMPOSITE PANEL**

(71) Applicant: **Samuel J. Osten**, Pittsburg, PA (US)

(72) Inventor: **Samuel J. Osten**, Pittsburg, PA (US)

(73) Assignee: **IMPACT GUARD LLC**, Leetsdale, PA (US)

(*) Notice: Subject to any disclaimer, the term of this patent is extended or adjusted under 35 U.S.C. 154(b) by 0 days.

(21) Appl. No.: **14/587,717**

(22) Filed: **Dec. 31, 2014**

(65) **Prior Publication Data**

US 2016/0185395 A1 Jun. 30, 2016

(51) **Int. Cl.**
B62D 29/04 (2006.01)

(52) **U.S. Cl.**
CPC ***B62D 29/043*** (2013.01)

(58) **Field of Classification Search**
CPC B62D 29/04; B62D 29/043; B62D 29/045; B62D 25/00; B62D 25/02; B62D 25/06; B62D 25/08; B62D 47/00; B60P 3/32
USPC 296/156, 168, 181.1, 181.2, 182.1, 296/186.1, 901.01
See application file for complete search history.

(56) **References Cited**

U.S. PATENT DOCUMENTS

4,353,857 A * 10/1982 Ray B29C 70/08 264/113
4,705,716 A * 11/1987 Tang B29C 70/865 296/181.2
6,247,747 B1 * 6/2001 Kawanomoto B60J 5/0498 296/181.3
6,375,249 B1 * 4/2002 Stanton B60N 2/242 296/178
7,025,408 B2 4/2006 Jones et al.
7,059,665 B2 * 6/2006 Murai B29C 70/22 264/257
7,281,754 B2 * 10/2007 Behr B29C 70/342 264/258
7,765,758 B2 * 8/2010 Chorney B62D 25/2054 296/191
7,914,034 B2 * 3/2011 Roush B29C 70/521 280/656
8,375,656 B2 2/2013 Ehrlich
8,678,480 B2 * 3/2014 Sawada H05K 1/0366 180/65.1
8,757,704 B2 * 6/2014 Zhao B32B 3/12 296/186.1
2007/0007794 A1 * 1/2007 Bertoch B62D 33/044 296/168
2007/0194602 A1 * 8/2007 Ehrlich B62D 33/04 296/186.1
2009/0053458 A1 * 2/2009 Birrell B62D 25/105 428/68
2009/0085378 A1 * 4/2009 Borchardt B60R 13/0815 296/191
2014/0130657 A1 * 5/2014 Pilpel F41H 5/0485 89/36.02
2014/0210233 A1 * 7/2014 Brymerski B60J 5/0415 296/191

* cited by examiner

Primary Examiner — Gregory Blankenship
(74) *Attorney, Agent, or Firm* — Nelson Mullins Riley & Scarborough, LLP

(57) **ABSTRACT**

A composite wall panel for use in vehicles having a floor structure and a front wall, the composite wall panel including a first polymer resin layer having a plurality of unidirectional fibers embedded therein that are substantially parallel to a first axis, and a second polymer resin layer having a plurality of unidirectional fibers embedded therein that are substantially parallel to a second axis, the second polymer resin layer being bonded to the first polymer resin layer so that the second axis is substantially perpendicular to the first axis. The composite wall panel is disposed so that the first axis is substantially parallel to the floor structure, and the rigidity of the composite wall panel is greater along the first axis than the second axis.
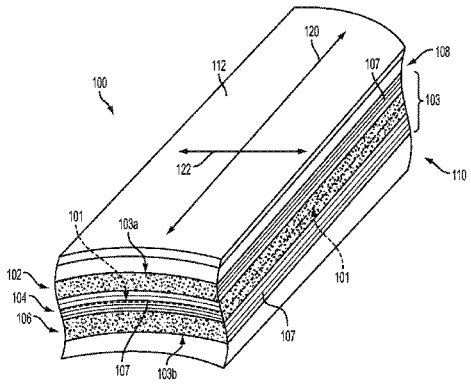
13 Claims, 3 Drawing Sheets