US009408507B2

(12) **United States Patent**
Brannan, Jr.

(10) **Patent No.: US 9,408,507 B2**
(45) **Date of Patent: Aug. 9, 2016**

(54) **PAPER SHEET MATERIAL DISPENSER APPARATUS WITH DYNAMIC BRAKING**

(71) Applicant: **DISPENSING DYNAMICS INTERNATIONAL**, City of Industry, CA (US)

(72) Inventor: **Richard Dale Brannan, Jr.**, Hacienda Heights, CA (US)

(73) Assignee: **Dispensing Dynamics International**, City of Industry, CA (US)

(*) Notice: Subject to any disclaimer, the term of this patent is extended or adjusted under 35 U.S.C. 154(b) by 167 days.

(21) Appl. No.: **14/283,327**

(22) Filed: **May 21, 2014**

(65) **Prior Publication Data**

US 2015/0335212 A1 Nov. 26, 2015

(51) **Int. Cl.**

B65H 20/02	(2006.01)
A47K 10/38	(2006.01)
A47K 10/36	(2006.01)

(52) **U.S. Cl.**

CPC ***A47K 10/38*** (2013.01); ***A47K 10/3625*** (2013.01); *A47K 2010/3668* (2013.01); *A47K 2010/3675* (2013.01); *A47K 2010/3863* (2013.01)

(58) **Field of Classification Search**

CPC A47K 10/00; A47K 10/16; A47K 10/18; A47K 10/22; A47K 10/24; A47K 10/26; A47K 10/32; A47K 10/34; A47K 10/36; A47K 10/3606; A47K 2010/3675

USPC 242/564, 564.1, 564.3, 564.4, 564.5, 242/565, 563, 563.1, 563.2

See application file for complete search history.

(56) **References Cited**

U.S. PATENT DOCUMENTS

3,730,409	A	5/1973	Ratti	
5,452,832	A *	9/1995	Niada	A47K 10/36 225/10
6,820,785	B2	11/2004	Kapiloff	
6,994,408	B1 *	2/2006	Bunnell	A47K 10/36 312/34.8
7,887,005	B2 *	2/2011	Troutman	A47K 10/36 242/419.5
7,984,872	B2 *	7/2011	Kuehneman	A47K 10/36 242/390.9
8,382,026	B2	2/2013	Keily et al.	
8,555,761	B2	10/2013	Keily et al.	
8,632,030	B2 *	1/2014	Troutman	A47K 10/36 242/563.2
2003/0110911	A1 *	6/2003	Kapiloff	A47K 10/36 83/208

FOREIGN PATENT DOCUMENTS

WO	WO0063100	10/2000

* cited by examiner

Primary Examiner — William A Rivera
(74) *Attorney, Agent, or Firm* — Thomas R. Lampe

(57) **ABSTRACT**

A paper sheet material dispenser operated by a DC motor has dynamic braking structure electrically braking the motor to provide more accurate positioning of the paper sheet material tail portion leading end when DC power to the DC motor is terminated.
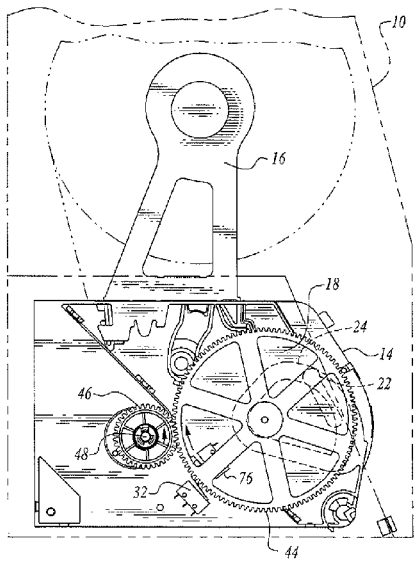
5 Claims, 6 Drawing Sheets