US005384606A

United States Patent [19]

Koch et al.

[11] Patent Number: 5,384,606

[45] Date of Patent: Jan. 24, 1995

[54] **DIFFRACTIVE/REFRACTIVE SPECTACLE AND INTRAOCULAR LENS SYSTEM FOR AGE-RELATED MACULAR DEGENERATION**

[75] Inventors: **Donald G. Koch**, Burbank; **Albert C. Ting**, Laguna Niguel; **Jim-Son Chou**, Irvine, all of Calif.

[73] Assignee: **Allergan, Inc.**, Irvine, Calif.

[21] Appl. No.: **901,932**

[22] Filed: **Jun. 22, 1992**

[51] **Int. Cl.**[6] **G02C 7/02**; G02C 7/08; A61F 2/16

[52] **U.S. Cl.** **351/158**; 351/159; 351/177; 623/6

[58] **Field of Search** ..... 351/158, 159, 160 R, 351/160 H, 161, 162, 177; 623/6

[56] **References Cited**

U.S. PATENT DOCUMENTS

4,010,496	3/1977	Neefe	351/161
4,504,982	3/1985	Burk	623/6
4,655,565	4/1987	Freeman	351/161
4,666,446	5/1987	Koziol et al.	623/6
4,710,197	12/1987	Donn et al.	351/160 R
4,828,558	5/1989	Kelman	351/161
4,863,468	9/1989	Feinbloom et al.	623/6
4,957,506	9/1990	Mercier	623/6
5,030,231	7/1991	Portney	623/6
5,044,706	9/1991	Chen	359/565
5,074,875	12/1991	Donn et al.	351/160R

FOREIGN PATENT DOCUMENTS

9169227	11/1991	Australia .
2040579	10/1991	Canada .
0157476	10/1985	European Pat. Off. .
0359179	3/1990	European Pat. Off. .
0441206	8/1991	European Pat. Off. .
0461856	12/1991	European Pat. Off. .

OTHER PUBLICATIONS

Faklis, D. & Morris, G., "Diffractive Lenses in Broadband Optical System Design", *Photonics Spectra*, 25(12)131–134, Dec. 1991.

Faklis, D. & Morris, G., "Optical Design With Diffractive Lenses", *Photonics Spectra*, 25(11) 205–208, Nov. 1991.

Swanson, G. J., "Binary Optics Technology: Theoretical Limits on the Diffraction Efficiency of Multilever Diffractive Optical Elements", *Technical Report* 914, Lincoln Laboatory, MIT, Mar. 1, 1991.

Forrest, Gary T., "Diffractive optics finds applications", *Laser Focus World*, p. 45 Feb. 1991.

Farn, M. W. & Goodman, J. W., "Effect of vlsi fabrication errors on kinoform efficiency", SPIE vol. 1211, pp. 125–136, 1990.

Cox, J. A., Werner, T., Lee, J., Nelson, S., Fritz, B., Bergstrom, J., "Diffraction efficiency of binary optical elements", *SPIE* vol. 1211, pp. 116–124, 1990.

Swanson, G. J., "Binary Optics Technology: The Theory and Design of Multi-level Diffractive Optical Elements", *Technical Report* 854, Lincoln Laboratory MIT Aug. 14, 1989.

Buralli, D. A., Morris, G. M., Rogers, J. R., "Optical performance of holographic kinoforms", *Applied Optics*, 28(5) 976–983, Mar. 1, 1989.

Riedl, M. J., "Predesign of Diamond Turned Refractive/Diffractive Elements for IR Objectives", handout at SPIE Conference Jan. 22, 1992.

Primary Examiner—Scott J. Sugarman
Attorney, Agent, or Firm—Gordon L. Peterson

[57] **ABSTRACT**

An ophthalmic lens system (**11**), including an IOL (**15**) having a negative IOL lens portion (**22**) and a positive lens (**13**) adapted to be outside the eye and direct light toward the negative IOL lens portion. At least one of the surfaces of at least one of the lenses has a diffractive portion.
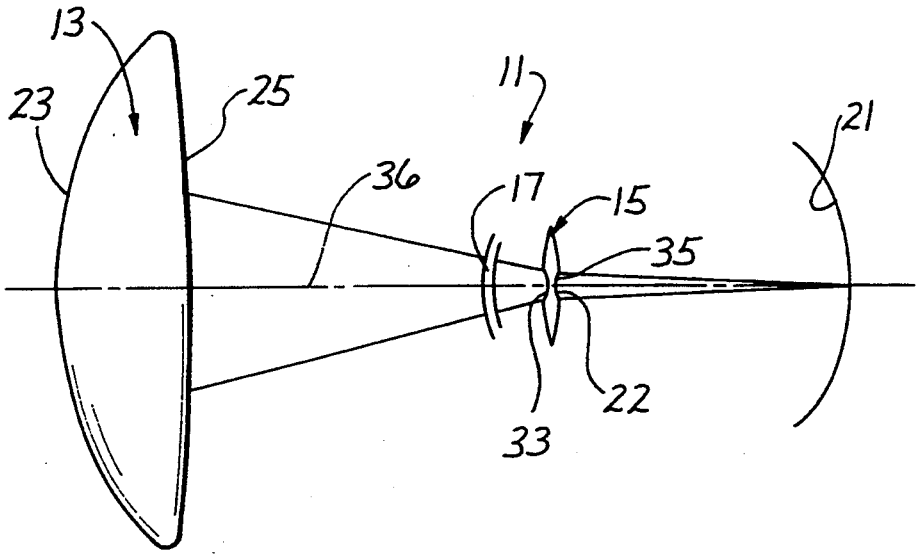
23 Claims, 2 Drawing Sheets