Nov. 1, 1966 P. F. HALSEY ETAL 3,282,006

PANELING STRUCTURES

Filed July 9, 1963 4 Sheets-Sheet 1

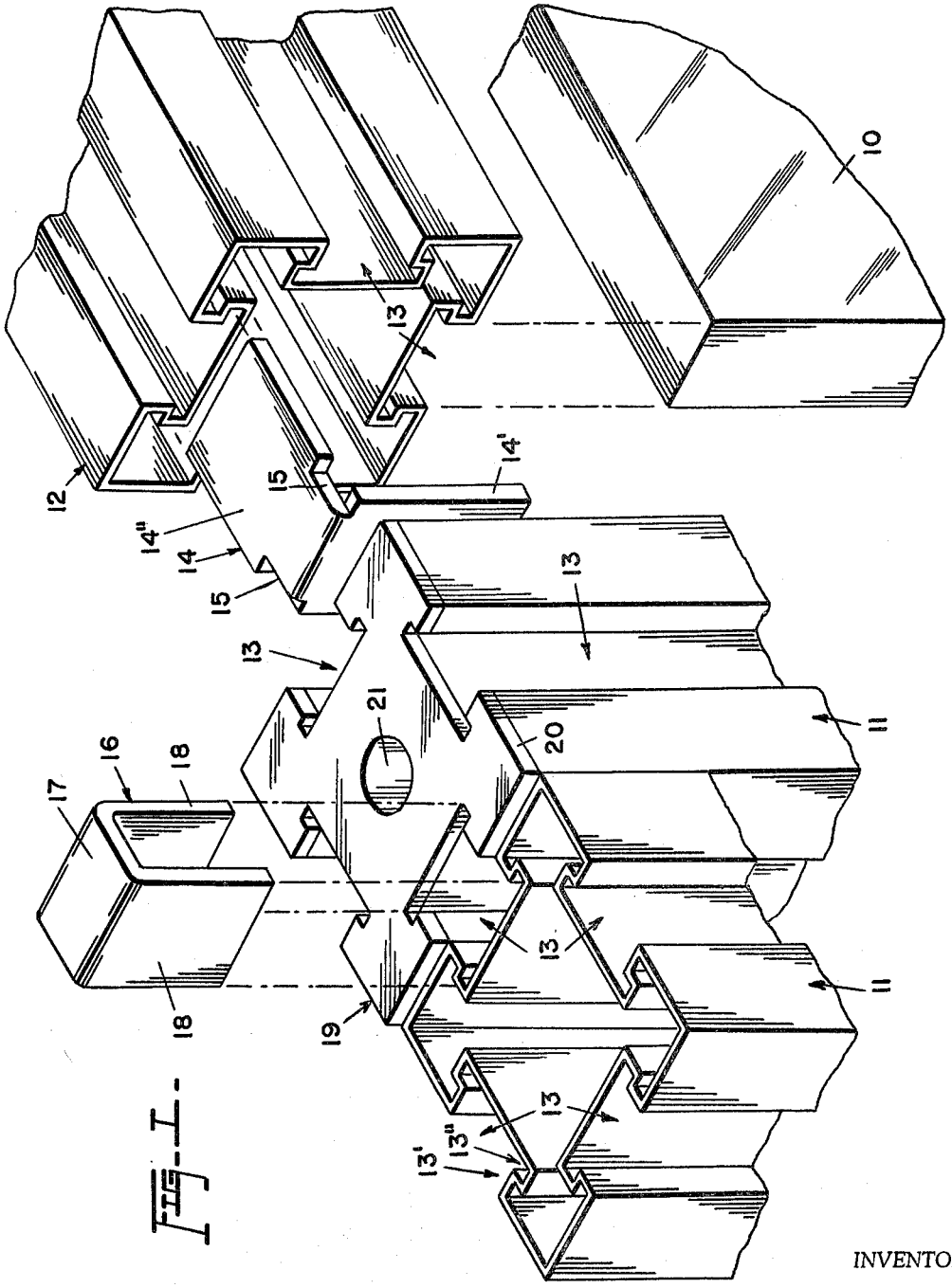

FIG. 1

INVENTORS

PAUL F. HALSEY
DANIEL C. TEVIS

BY Monroe H. Lane
ATTORNEY