PLURAL BEAM CATHODE RAY TUBE

Filed Nov. 21, 1956 2 Sheets-Sheet 1

FIG.1

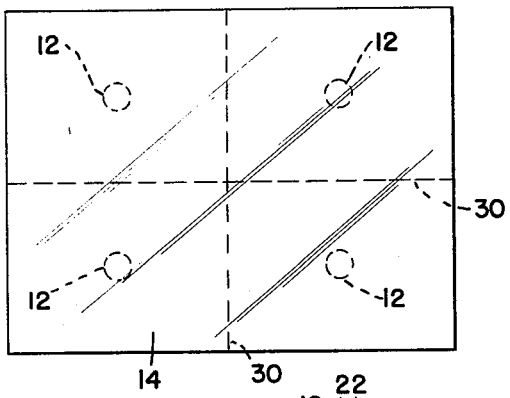

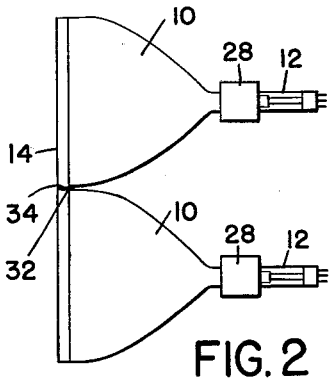

FIG. 2

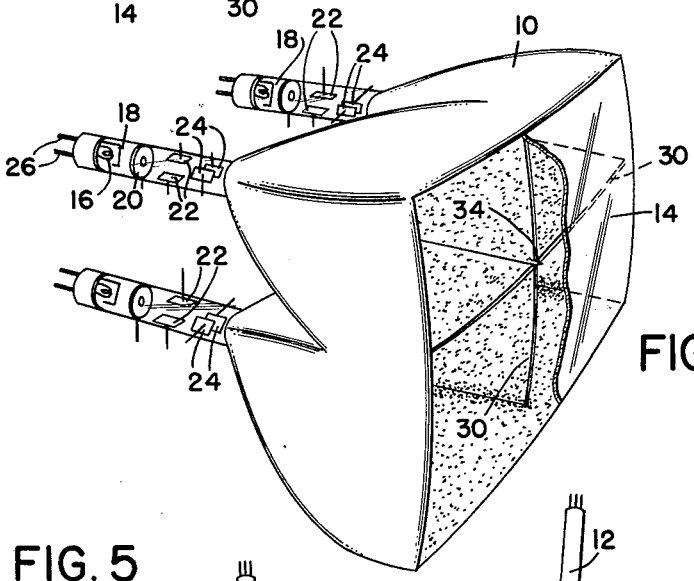

FIG. 3

FIG. 5

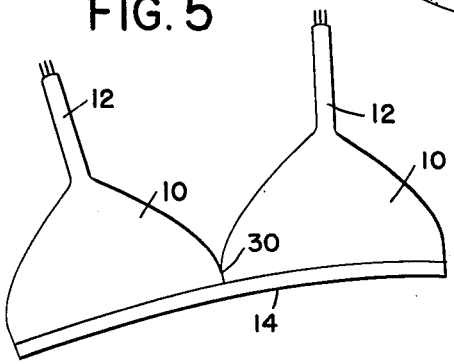

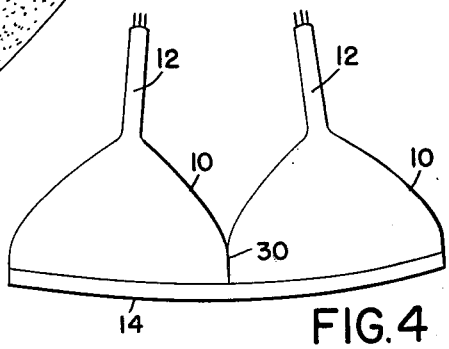

FIG.4

INVENTOR

ADRIAN WALDORF

BY Raymond W Colton

ATTORNEY