US007367806B1

(12) **United States Patent**
Murphy et al.

(10) **Patent No.: US 7,367,806 B1**
(45) **Date of Patent: May 6, 2008**

(54) **BRAILLE CELL CAP**

(75) Inventors: **Patrick Murphy**, Riverview, FL (US); **Todd Conard**, Ruskin, FL (US); **Waldemar H. Tunkis**, Palm Harbor, FL (US); **Michael Goldenberg**, Melbourne Beach, FL (US); **Carlos M. Rodriguez**, Palm Harbor, FL (US)

(73) Assignee: **Freedom Scientific, Inc.**, St. Petersburg, FL (US)

(*) Notice: Subject to any disclaimer, the term of this patent is extended or adjusted under 35 U.S.C. 154(b) by 241 days.

(21) Appl. No.: **10/711,427**

(22) Filed: **Sep. 17, 2004**

Related U.S. Application Data

(60) Provisional application No. 60/481,979, filed on Jan. 30, 2004.

(51) **Int. Cl.**
G09B 21/00 (2006.01)

(52) **U.S. Cl.** **434/112**

(58) **Field of Classification Search** 434/112, 434/113, 115, 117; 400/109.1
See application file for complete search history.

(56) **References Cited**

U.S. PATENT DOCUMENTS

4,836,784	A *	6/1989	Joachim	434/113
5,165,897	A *	11/1992	Johnson	434/113
5,226,817	A *	7/1993	Nakajima et al.	434/113
5,449,292	A *	9/1995	Tani et al.	434/114
5,685,720	A *	11/1997	Kashi	434/114
5,820,377	A *	10/1998	Murphy et al.	434/113
5,842,867	A *	12/1998	Hong et al.	434/114
6,109,922	A *	8/2000	Litschel et al.	434/114
6,354,839	B1 *	3/2002	Schmidt et al.	434/113
6,700,553	B2 *	3/2004	Becker et al.	345/31
6,705,868	B1 *	3/2004	Schleppenbach et al.	434/114
6,712,613	B2 *	3/2004	Depta	434/114
6,743,021	B2 *	6/2004	Prince et al.	434/113
6,776,619	B1 *	8/2004	Roberts et al.	434/113
7,083,416	B1 *	8/2006	Goldenbert	434/113
2004/0091842	A1 *	5/2004	Carro	434/112
2004/0175677	A1 *	9/2004	Koch et al.	434/113
2004/0197745	A1 *	10/2004	Hong et al.	434/113
2005/0158695	A1 *	7/2005	Takahashi	434/113

* cited by examiner

Primary Examiner—Kurt Fernstrom
(74) *Attorney, Agent, or Firm*—Holland & Knight LLP

(57) **ABSTRACT**

An electromechanical Braille cell assembly includes a plurality of parallel bimorph reeds. A first plurality of bimorph reeds is mounted to a first side of a printed circuit board by a first plurality of clips and a second plurality of bimorph reeds is mounted to a second side of the printed circuit board by a second plurality of clips. A frame has a top wall, a bottom wall, a first side wall in the form of an angle wall and a second side wall in the form of a flat wall. Pinholes are formed in the angle wall to accommodate Braille pins and the flat wall is slotted to accommodate a plurality of printed circuit boards. A monolithic cap covers all of the Braille pins. Pinholes formed in the cap receive the respective tips of the Braille cells when actuated bimorph reeds cause displacement of the Braille pins.
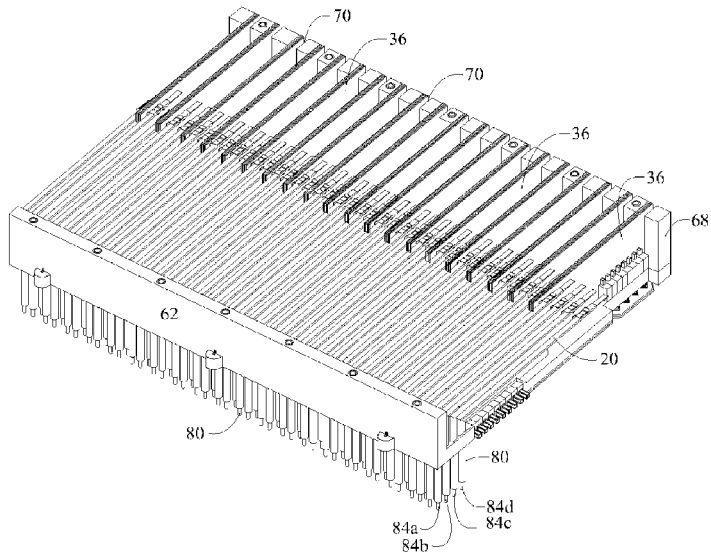
5 Claims, 15 Drawing Sheets