Jan. 16, 1968 R. FEENSTRA 3,363,706

BIT WITH EXTENDED JET NOZZLES

Filed July 20, 1965

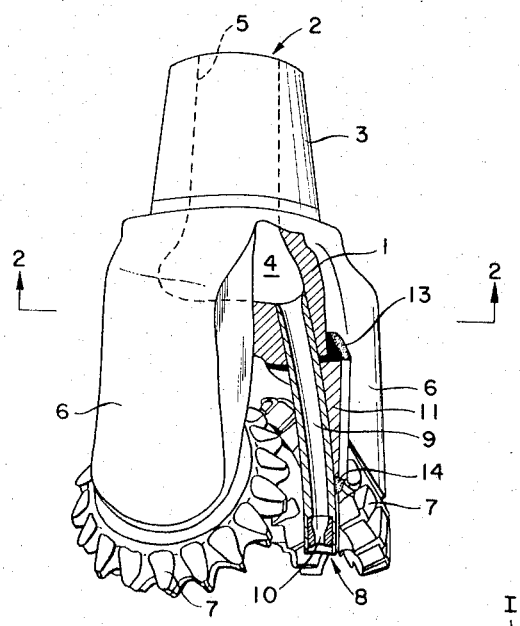

FIG. 1

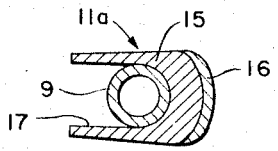

FIG. 3

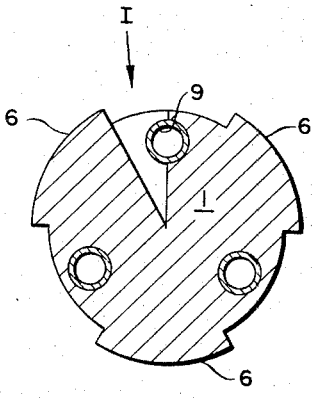

FIG. 2

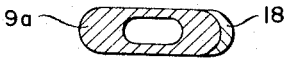

FIG. 4

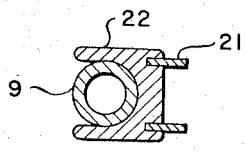

FIG. 6

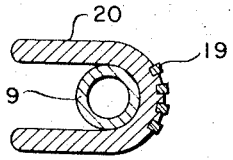

FIG. 5

INVENTOR:
ROBIJN FEENSTRA
BY: Oswald D. Milmore
HIS ATTORNEY