US006151206A

United States Patent [19]

Kato et al.

[11] **Patent Number: 6,151,206**

[45] **Date of Patent: Nov. 21, 2000**

[54] **ELECTRONIC DEVICE**

[75] Inventors: **Masahiro Kato**; **Masahiko Suzuki**; **Makoto Tanahashi**, all of Kanagawa, Japan

[73] Assignee: **Sony Corporation**, Tokyo, Japan

[21] Appl. No.: **09/162,204**

[22] Filed: **Sep. 28, 1998**

[30] **Foreign Application Priority Data**

Sep. 29, 1997 [JP] Japan 9-263886

[51] **Int. Cl.**[7] **G06F 1/16**; H05K 7/16

[52] **U.S. Cl.** **361/681**; 361/679; 361/682; 361/683; 364/708.1; 381/87; 381/88

[58] **Field of Search** 361/679, 681, 361/682, 683; 364/708.1; 381/87, 88

[56] **References Cited**

U.S. PATENT DOCUMENTS

5,519,572 5/1996 Luo 361/685
5,608,863 3/1997 Ishizawa et al. 361/681
5,812,369 9/1998 Hsu et al. 361/683
5,852,545 12/1998 Pan-Ratzlaff 361/683

Primary Examiner—Leo P. Picard
Assistant Examiner—Hung Van Duong
Attorney, Agent, or Firm—Frommer Lawrence & Haug, LLP; William S. Frommer; Matthew K. Ryan

[57] **ABSTRACT**

A portable electronic device, which has an accessory provided at an external surface, around the display screen, of the display portion, the portable electronic device including a body; a display portion openably and closably provided with respect to the body; holding portion, provided at an external surface, around the display screen, of the display portion, for mechanically and removably holding the accessory; and electrically connecting portion for electrically and removably connecting the accessory.
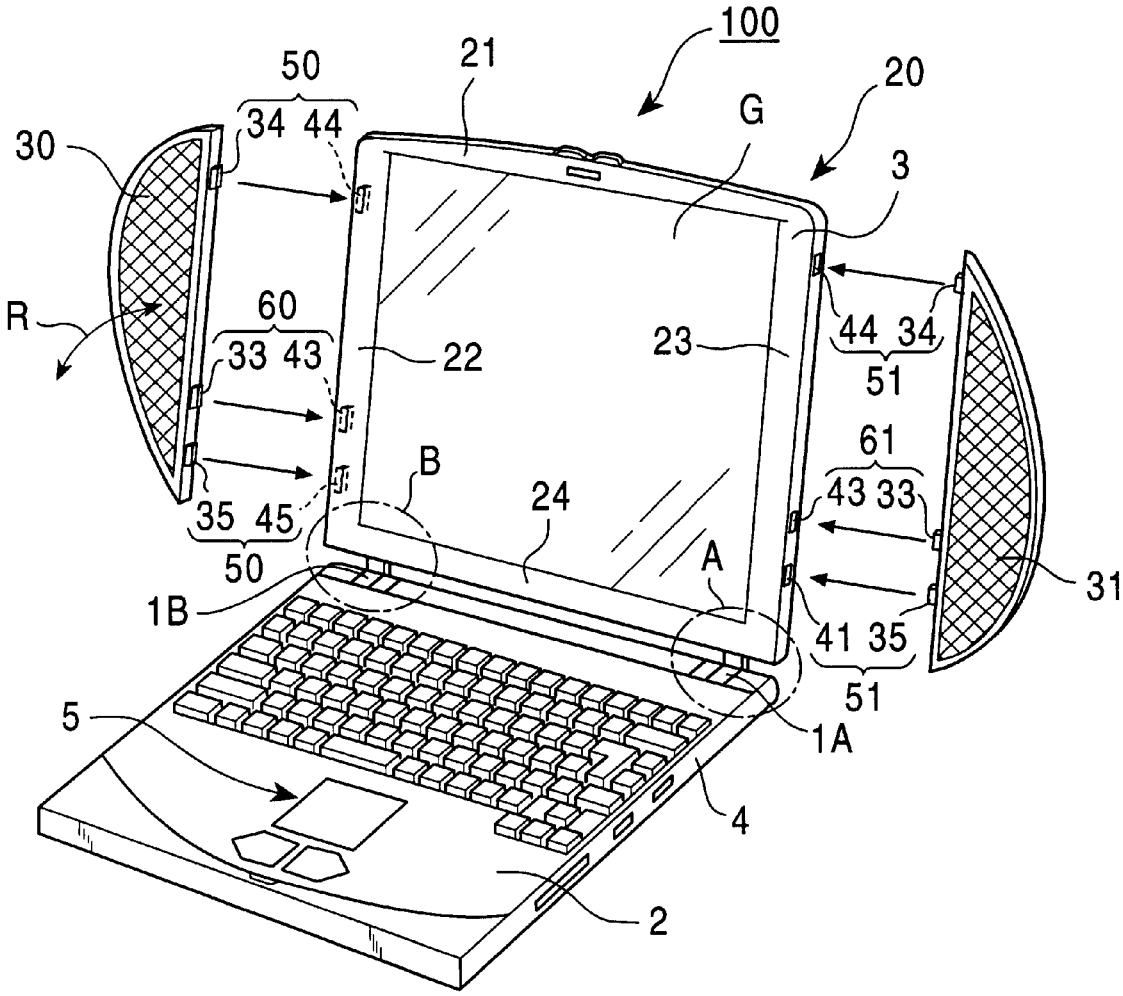
7 Claims, 13 Drawing Sheets