Aug. 5, 1958 P. CASTIGLIONE 2,846,106

DEVICE FOR DISPENSING AND APPLYING AN ADHESIVE TAPE

Filed Sept. 13, 1957 2 Sheets-Sheet 1

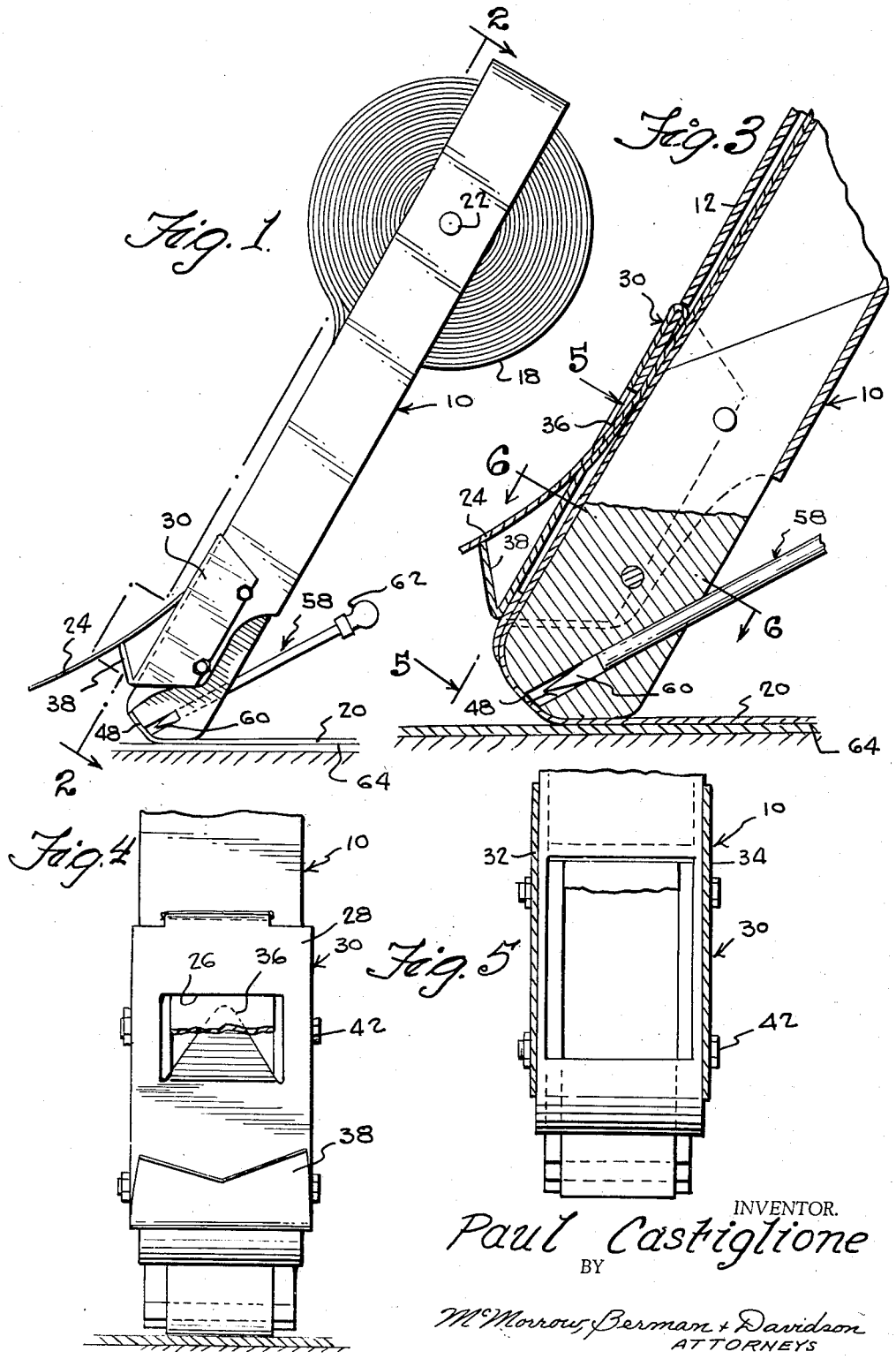

INVENTOR.
Paul Castiglione
BY
McMorrow, Berman & Davidson
ATTORNEYS