US009637006B2

(12) **United States Patent**
Lindsey et al.

(10) **Patent No.: US 9,637,006 B2**
(45) **Date of Patent: May 2, 2017**

(54) **POWER CONVERTER FOR ELECTRIC HYBRID EARTHMOVING MACHINE**

(71) Applicant: **CATERPILLAR INC.**, Peoria, IL (US)

(72) Inventors: **Robert W. Lindsey**, Washington, IL (US); **Donald John Gilmore**, Dunlap, IL (US)

(73) Assignee: **Caterpillar Inc.**, Peoria, IL (US)

(*) Notice: Subject to any disclaimer, the term of this patent is extended or adjusted under 35 U.S.C. 154(b) by 456 days.

(21) Appl. No.: **14/447,824**

(22) Filed: **Jul. 31, 2014**

(65) **Prior Publication Data**

US 2016/0031328 A1 Feb. 4, 2016

(51) **Int. Cl.**

B60L 1/00	(2006.01)
B60L 3/00	(2006.01)
H02G 3/00	(2006.01)
B60L 11/08	(2006.01)
B60L 11/12	(2006.01)
B60L 11/18	(2006.01)
B60L 15/02	(2006.01)
B60W 20/00	(2016.01)

(52) **U.S. Cl.**

CPC ***B60L 11/08*** (2013.01); ***B60L 1/00*** (2013.01); ***B60L 11/12*** (2013.01); ***B60L 11/1811*** (2013.01); ***B60L 15/025*** (2013.01); ***B60W 20/00*** (2013.01); *B60L 2200/40* (2013.01); *B60L 2210/00* (2013.01); *B60L 2240/527* (2013.01); *Y02T 10/643* (2013.01); *Y02T 10/7005* (2013.01); *Y02T 10/7072* (2013.01); *Y02T 10/7077* (2013.01); *Y02T 90/127* (2013.01); *Y02T 90/14* (2013.01)

(58) **Field of Classification Search**

CPC B60L 11/08; B60L 1/00
USPC 307/10.1
See application file for complete search history.

(56) **References Cited**

U.S. PATENT DOCUMENTS

6,864,663	B2	3/2005	Komiyama et al.
7,911,079	B2	3/2011	Hoff et al.
8,098,039	B2	1/2012	Endo et al.
8,423,217	B2	4/2013	Kojima et al.
8,479,848	B2	7/2013	Yanagisawa
9,061,595	B2 *	6/2015	King B60L 1/003

(Continued)

FOREIGN PATENT DOCUMENTS

JP	2011-190623	9/2011
WO	WO 2013/122101	8/2013

Primary Examiner — Carlos Amaya
(74) *Attorney, Agent, or Firm* — Finnegan, Henderson, Farabow, Garrett & Dunner, LLP

(57) **ABSTRACT**

An electrical system architecture for a mobile, electric hybrid machine includes a first bus configured to receive electric power at a first, selectively adjustable voltage from an electrical power source. A second bus is configured to receive electric power at a second voltage that is lower than the first voltage. A controller is configured to determine a desired magnitude of the second voltage for the second bus, produce a signal indicative of a magnitude of the first, selectively adjustable voltage that is a multiple of the desired magnitude of the second voltage, and adjust the magnitude of the first voltage in the first bus to the multiple of the desired magnitude of the second voltage. A fixed-ratio power converter is configured to convert the power at the first voltage in the first bus to the power at the second voltage in the second bus.
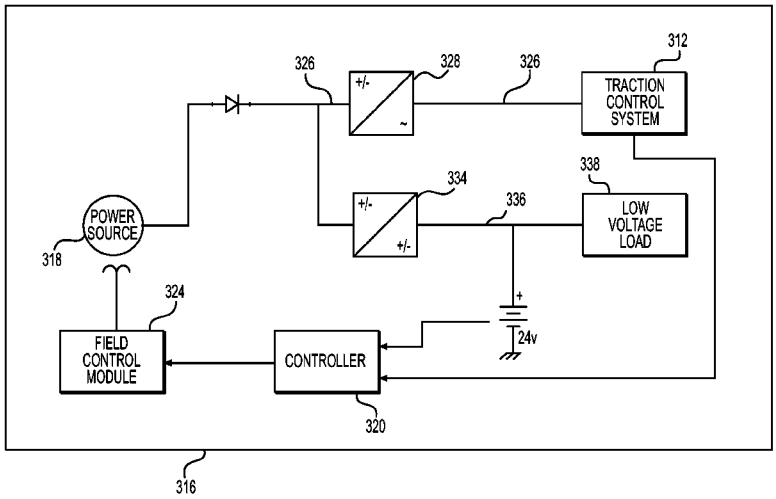
20 Claims, 4 Drawing Sheets