US006134606A

United States Patent [19]

Anderson et al.

[11] **Patent Number: 6,134,606**

[45] **Date of Patent: *Oct. 17, 2000**

[54] **SYSTEM/METHOD FOR CONTROLLING PARAMETERS IN HAND-HELD DIGITAL CAMERA WITH SELECTABLE PARAMETER SCRIPTS, AND WITH COMMAND FOR RETRIEVING CAMERA CAPABILITIES AND ASSOCIATED PERMISSIBLE PARAMETER VALUES**

[75] Inventors: **Eric Anderson**, San Jose; **Patricia Scardino**, Fremont, both of Calif.

[73] Assignee: **FlashPoint Technology, Inc.**, San Jose, Calif.

[*] Notice: This patent issued on a continued prosecution application filed under 37 CFR 1.53(d), and is subject to the twenty year patent term provisions of 35 U.S.C. 154(a)(2).

[21] Appl. No.: **08/900,486**

[22] Filed: **Jul. 25, 1997**

[51] **Int. Cl.**[7] **G03F 3/00**; G03B 17/00; G03B 17/18; G03B 17/48; G06F 15/16

[52] **U.S. Cl.** **710/14**; 710/8; 710/10; 396/57; 396/297; 709/228; 703/27

[58] **Field of Search** 396/48, 57, 281, 396/297, 429; 710/8, 10, 14; 709/227, 228; 703/27

[56] **References Cited**

U.S. PATENT DOCUMENTS

4,403,303	9/1983	Howes et al.	364/900
4,823,283	4/1989	Diehm et al.	364/518
5,142,319	8/1992	Wakabayashi et al.	354/465
5,159,364	10/1992	Yanagisawa et al.	354/21
5,179,653	1/1993	Fuller	395/156
5,224,207	6/1993	Filion et al.	395/101
5,270,821	12/1993	Samuels	358/188
5,311,240	5/1994	Wheeler	354/402
5,390,314	2/1995	Swanson	395/500
5,416,556	5/1995	Suzuki et al.	354/400
5,475,428	12/1995	Hintz et al.	348/263
5,475,441	12/1995	Parulski et al.	348/552
5,477,264	12/1995	Sarbadhikari et al.	348/231
5,493,335	2/1996	Parulski et al.	348/233
5,495,559	2/1996	Makino	395/112
5,534,975	7/1996	Stefik et al.	355/202
5,541,656	7/1996	Kare et al.	348/334
5,594,524	1/1997	Sasagaki et al.	396/287
5,659,547	8/1997	Scarr et al.	395/182.02
5,684,511	11/1997	Westerink et al.	345/157
5,784,177	7/1998	Sanchez et al.	358/468
5,790,800	8/1998	Gauvin et al.	395/200.57
5,822,581	10/1998	Christeson	395/651
5,848,193	12/1998	Garcia	382/232
5,903,786	5/1999	Goto	396/297
6,006,039	12/1999	Steinberg et al.	396/57
6,037,972	3/2000	Horiuchi et al.	348/64

OTHER PUBLICATIONS

NEC PC–DC401 Digital Still Camera, AppleLink Newbytes, Martyn Williams, pp. 1–13.

Primary Examiner—Thomas C. Lee
Assistant Examiner—Tanh Quang Nguyen
Attorney, Agent, or Firm—Sawyer Law Group LLP

[57] **ABSTRACT**

A system and method for controlling parameters in an electronic imaging device comprises a series of parameter storage locations coupled to the imaging device for containing parameter value sets, a set of parameter commands for controlling the parameter value sets, and a parameter manager device for executing the set of parameter commands to control the parameters in the electronic imaging device.
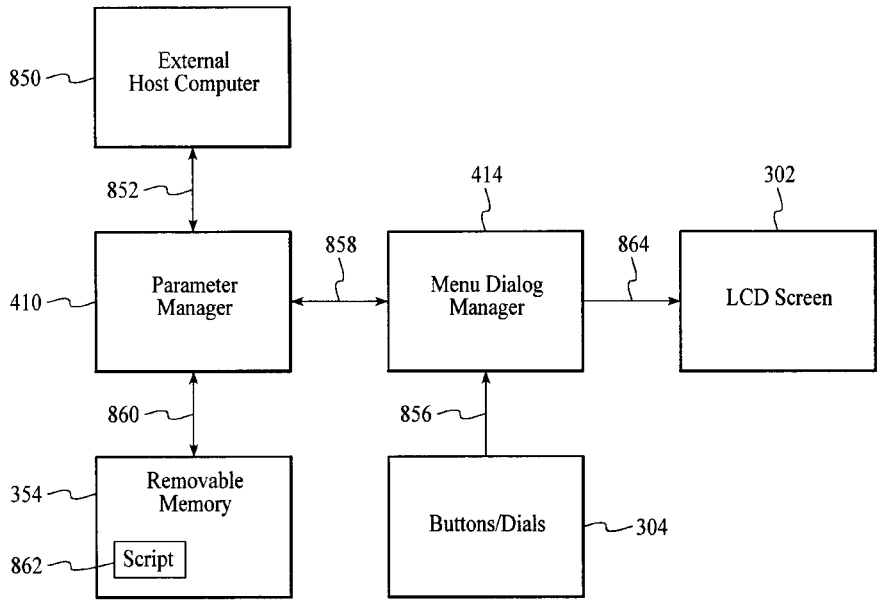
29 Claims, 14 Drawing Sheets