April 7, 1964 G. W. GOETZE ET AL 3,128,406

RADIATION IMAGE PICKUP TUBE

Filed April 28, 1961

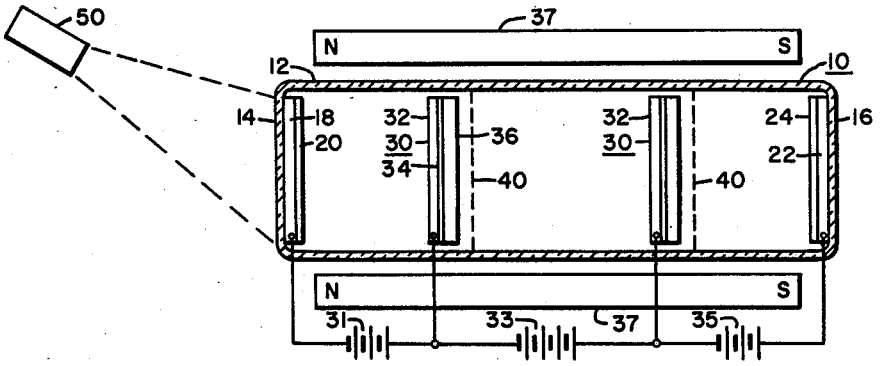

Fig. 1.

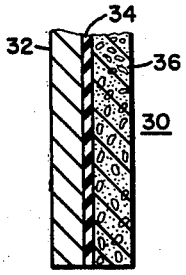

Fig. 2.

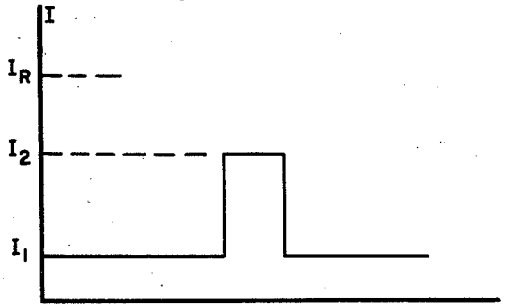

Fig. 3.

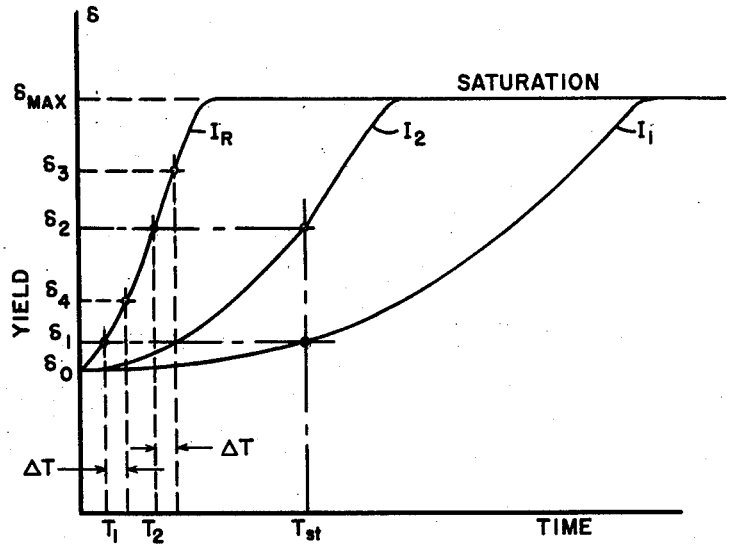

Fig. 4.

WITNESSES:

Bernard R. Gieguey

James T. Young

INVENTORS

Gerhard W. Goetze &

Helmut Kanter.

BY

Charles F. Renz

ATTORNEY