US007222106B2

(12) **United States Patent**
Block et al.

(10) **Patent No.: US 7,222,106 B2**
(45) **Date of Patent: May 22, 2007**

(54) **MECHANISMS FOR HANDLING SOFTWARE LICENSE AGREEMENTS ON MULTI-USER SYSTEM**

(75) Inventors: **Jeffrey Alan Block**, Rochester, MN (US); **Bonita Kay Chaney**, Mantorville, MN (US); **Clair L. Ewert**, Rochester, MN (US); **Robert Joseph Padzieski**, Rochester, MN (US)

(73) Assignee: **International Business Machines Corporation**, Armonk, NY (US)

(*) Notice: Subject to any disclaimer, the term of this patent is extended or adjusted under 35 U.S.C. 154(b) by 783 days.

(21) Appl. No.: **10/152,664**

(22) Filed: **May 21, 2002**

(65) **Prior Publication Data**

US 2003/0220883 A1 Nov. 27, 2003

(51) **Int. Cl.**
G06Q 99/00 (2006.01)
H04K 1/00 (2006.01)
H04L 9/00 (2006.01)

(52) **U.S. Cl.** **705/59**; 705/51

(58) **Field of Classification Search** 75/59; 707/204; 715/175; 717/176, 170
See application file for complete search history.

(56) **References Cited**

U.S. PATENT DOCUMENTS

5,671,412 A * 9/1997 Christiano 707/104.1
6,108,420 A * 8/2000 Larose et al. 705/59
6,131,192 A * 10/2000 Henry 717/175
6,289,452 B1 * 9/2001 Arnold et al. 713/175
6,381,742 B2 * 4/2002 Forbes et al. 717/176
6,473,771 B1 * 10/2002 Zimniewicz et al. 707/104.1
6,493,871 B1 * 12/2002 McGuire et al. 717/173
6,698,018 B1 * 2/2004 Zimniewicz et al. 717/175
6,744,450 B1 * 6/2004 Zimniewicz et al. 715/841
6,757,698 B2 * 6/2004 McBride et al. 707/204
6,823,508 B1 * 11/2004 Burkhardt et al. 717/174
2001/0029605 A1 * 10/2001 Forbes et al. 717/11
2001/0051928 A1 * 12/2001 Brody 705/52

(Continued)

OTHER PUBLICATIONS

http://www.serc.net/report/tr273.pdf—The Eclipse Platform for Tool Integration and Development: Zage et al., Jun. 18, 2006, p. 8, 9 10.*

(Continued)

Primary Examiner—Kambiz Abdi
Assistant Examiner—Evens Augustin
(74) *Attorney, Agent, or Firm*—Patterson & Sheridan, LLP

(57) **ABSTRACT**

A method, a data structure, a computer program product and a computer-readable medium for handling license agreements for multiple software packages in a computer system, each software package being identified by a unique package ID and comprising one or more components. One embodiment provides a method comprising: providing a plurality of document files, each document file comprising one or more text elements; providing a plurality of manifest files, each manifest file indicating at least one corresponding document file of the plurality of document files and comprising a unique package ID designating a corresponding software package; extracting a specific unique package ID from a specific software package; determining a corresponding manifest file from the plurality of manifest files on the basis of the extracted unique package ID; determining the at least one corresponding document file of the plurality of document files on the basis of the determined corresponding manifest file; and combining the one or more text elements comprised in the at least one determined corresponding document file to build a license agreement for the specific software package.
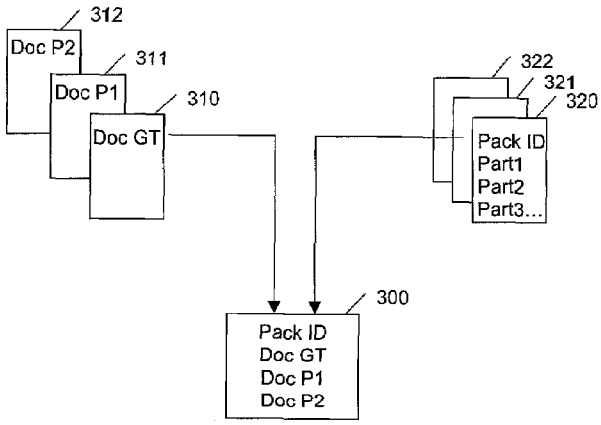
42 Claims, 13 Drawing Sheets