350-417 SR

E297A XR 3,420,006

Jan. 7, 1969 H. J. BARNETT 3,420,006

APPARATUS FOR GRINDING MULTIFOCAL LENS

Filed Jan. 27, 1964

Continuously variable multifocal contact lens

Fig. 1

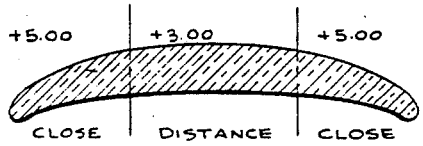

Fig. 2

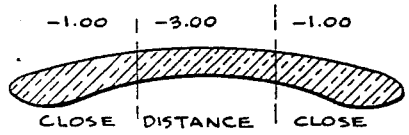

Fig. 3

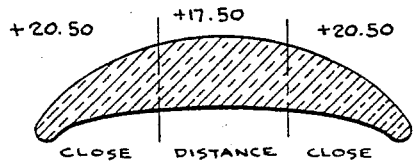

Fig. 5

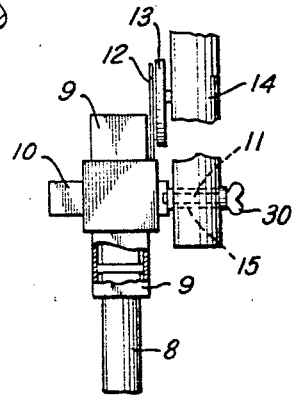

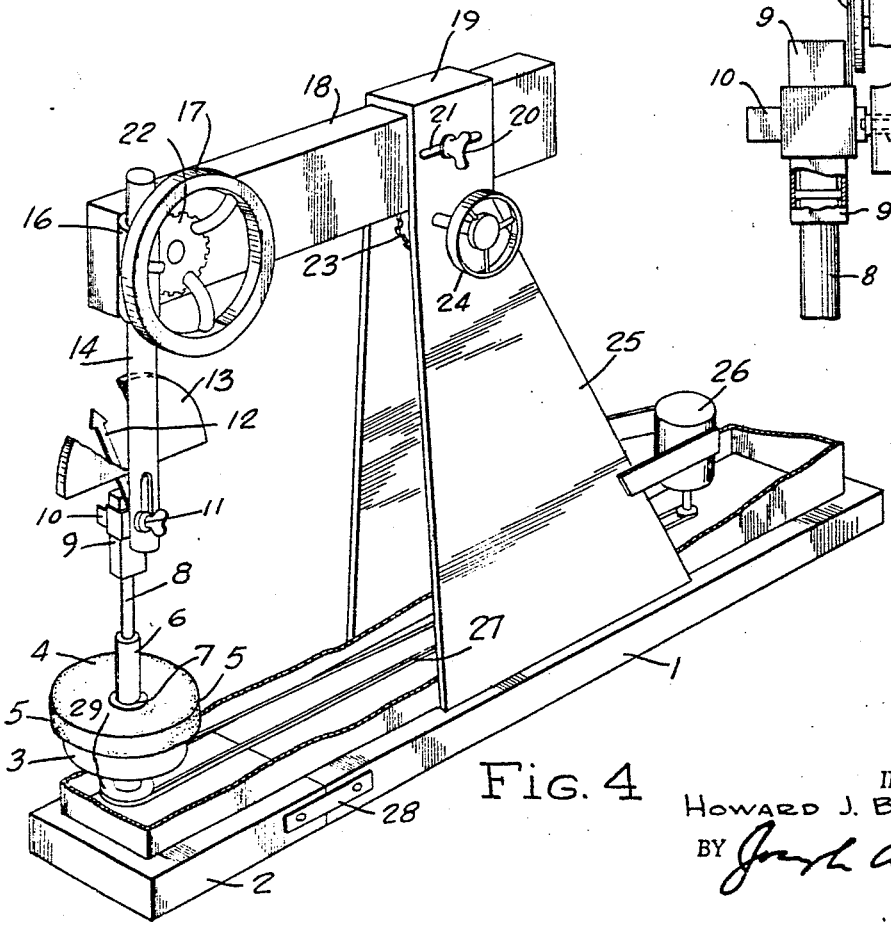

Fig. 4

INVENTOR
HOWARD J. BARNETT
BY Joseph A. Hill
ATTORNEY

OK 51-129