US009411406B2

(12) **United States Patent**
Tang et al.

(10) **Patent No.: US 9,411,406 B2**
(45) **Date of Patent: Aug. 9, 2016**

(54) **SRAM REGULATING RETENTION SCHEME WITH DISCRETE SWITCH CONTROL AND INSTANT REFERENCE VOLTAGE GENERATION**

(71) Applicant: **Apple Inc.**, Cupertino, CA (US)

(72) Inventors: **Bo Tang**, Sunnyvale, CA (US); **Ajay Kumar Bhatia**, Saratoga, CA (US)

(73) Assignee: **Apple Inc.**, Cupertino, CA (US)

(*) Notice: Subject to any disclaimer, the term of this patent is extended or adjusted under 35 U.S.C. 154(b) by 362 days.

(21) Appl. No.: **13/921,475**

(22) Filed: **Jun. 19, 2013**

(65) **Prior Publication Data**

US 2014/0380068 A1 Dec. 25, 2014

(51) **Int. Cl.**

G06F 1/26	(2006.01)
G06F 1/32	(2006.01)
G05F 1/46	(2006.01)

(52) **U.S. Cl.**

CPC ***G06F 1/3275*** (2013.01); ***G05F 1/468*** (2013.01); ***G06F 1/26*** (2013.01); ***G06F 1/32*** (2013.01)

(58) **Field of Classification Search**

CPC G06F 1/26

See application file for complete search history.

(56) **References Cited**

U.S. PATENT DOCUMENTS

5,378,936	A *	1/1995	Kokubo et al.	327/77
5,877,719	A *	3/1999	Matsui et al.	341/155
6,707,724	B2 *	3/2004	Kim et al.	365/189.09
6,738,298	B1	5/2004	Cioaca et al.	
6,930,948	B2	8/2005	Lee et al.	
8,351,279	B2	1/2013	Tang et al.	
2006/0028193	A1 *	2/2006	Migliavacca	323/316
2009/0046532	A1	2/2009	Gouin	

* cited by examiner

Primary Examiner — Kim Huynh
Assistant Examiner — Eric Chang
(74) *Attorney, Agent, or Firm* — Meyertons, Hood, Kivlin, Kowert & Goetzel, P.C.

(57) **ABSTRACT**

A system including control logic, a voltage reference, a sense amplifier, and a voltage supply circuit is presented. The sense amplifier may be configured to detect a current state of the voltage supply circuit output compared to the reference voltage. The voltage supply circuit may be configured to capture and preserve the current state to be used as a previous state. The voltage regulator may be configured to compare the current state to one or more previous states and adjust the voltage regulator output based on the comparison. Control logic may be configured to enable the voltage reference output in response to a signal. Control logic may be configured to enable the sense amplifier at a time after the voltage reference is stable. Control logic may be configured to disable the voltage reference output in response to the sense amplifier generating an output.
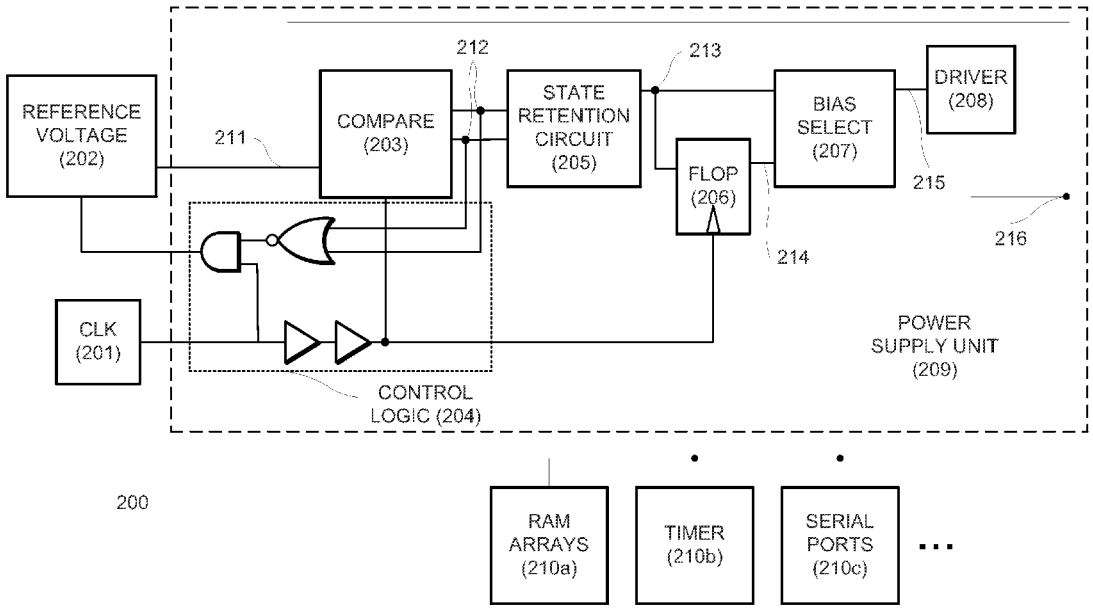
20 Claims, 8 Drawing Sheets