US009410806B2

(12) **United States Patent**
Ezekwe

(10) **Patent No.: US 9,410,806 B2**
(45) **Date of Patent: Aug. 9, 2016**

(54) **SYSTEM AND METHOD FOR GYROSCOPE ZERO-RATE-OFFSET DRIFT REDUCTION THROUGH DEMODULATION PHASE ERROR CORRECTION**

(71) Applicant: **Robert Bosch GmbH**, Stuttgart (DE)

(72) Inventor: **Chinwuba D. Ezekwe**, Albany, CA (US)

(73) Assignee: **Robert Bosch GmbH**, Stuttgart (DE)

(*) Notice: Subject to any disclaimer, the term of this patent is extended or adjusted under 35 U.S.C. 154(b) by 463 days.

(21) Appl. No.: **14/010,163**

(22) Filed: **Aug. 26, 2013**

(65) **Prior Publication Data**

US 2015/0057959 A1 Feb. 26, 2015

(51) **Int. Cl.**
G01P 21/00 (2006.01)
G01C 19/5776 (2012.01)

(52) **U.S. Cl.**
CPC ***G01C 19/5776*** (2013.01)

(58) **Field of Classification Search**
CPC G01C 19/56; G01C 19/5776
See application file for complete search history.

(56) **References Cited**

U.S. PATENT DOCUMENTS

3,625,067 A * 12/1971 Emslie G01C 19/5691 73/504.13
4,499,436 A 2/1985 Grib
5,289,258 A 2/1994 Szafraniec et al.
5,325,173 A 6/1994 Tazartes et al.
5,347,359 A 9/1994 Hutchings et al.
5,654,906 A 8/1997 Youngquist
5,978,084 A 11/1999 Blake
6,067,858 A 5/2000 Clark et al.
7,127,932 B2 * 10/2006 Morell G01C 19/56 73/1.77
7,805,993 B2 10/2010 Spahlinger
8,061,201 B2 11/2011 Ayazi et al.
8,151,641 B2 4/2012 Geen
8,578,775 B2 * 11/2013 Hayner G01C 19/5776 329/360
2007/0144255 A1 6/2007 Handrich et al.
2007/0194842 A1 8/2007 Hotelling et al.

OTHER PUBLICATIONS

Ziomek et al., "Digital I/Q Demodulator", Stanford Linear Accelerator Center; Work supported by Department of Energy, contract DE-AC03-76SF00515; Stanford, USA (3 pages).
International Search Report and Written Opinion corresponding to PCT Application No. PCT/US2014/051665, mailed May 28, 2015 (9 pages).

* cited by examiner

Primary Examiner — Elias Desta
(74) *Attorney, Agent, or Firm* — Maginot Moore & Beck LLP

(57) **ABSTRACT**

A circuit for processing signals from a gyroscope includes a first that generates an in-phase demodulated signal and a second demodulator that generates a quadrature-phase demodulated signal with reference to in-phase and quadrature-phase modulated signals, respectively, from the gyroscope. The circuit includes a digital processor that receives the demodulated in-phase and quadrature phase signals from the demodulators and generates an output signal corresponding to a rotation of the gyroscope along a predetermined axis with reference to the in-phase demodulated signal and the quadrature-phase demodulated signal to remove a portion of the quadrature-phase signal from the in-phase signal.
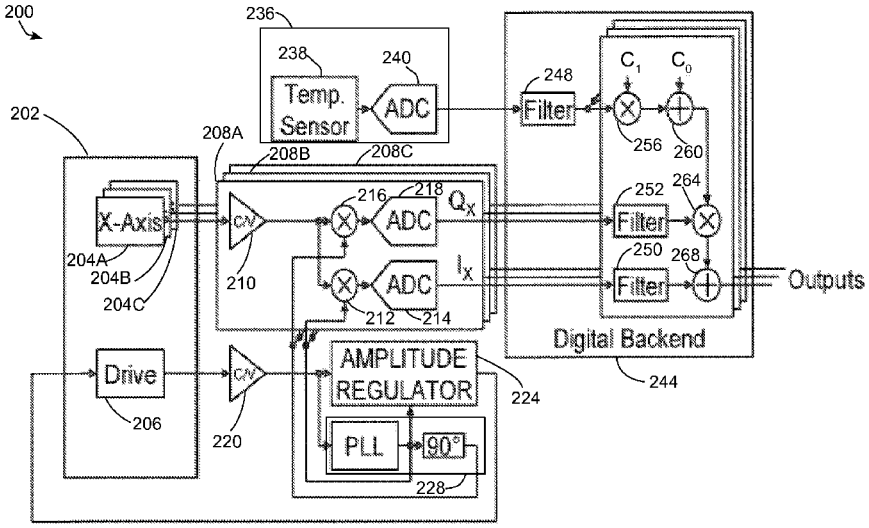
11 Claims, 2 Drawing Sheets