US009510506B2

(12) **United States Patent**
Castelli et al.

(10) **Patent No.: US 9,510,506 B2**
(45) **Date of Patent: Dec. 6, 2016**

(54) **MOWER-MOUNTED TRIMMER**

(71) Applicants: **Laurence J. Castelli**, Spring Valley, IL (US); **David J. Sickley**, Peru, IL (US)

(72) Inventors: **Laurence J. Castelli**, Spring Valley, IL (US); **David J. Sickley**, Peru, IL (US)

(*) Notice: Subject to any disclaimer, the term of this patent is extended or adjusted under 35 U.S.C. 154(b) by 0 days.

(21) Appl. No.: **13/974,423**

(22) Filed: **Aug. 23, 2013**

(65) **Prior Publication Data**

US 2015/0052867 A1 Feb. 26, 2015

Related U.S. Application Data

(60) Provisional application No. 61/743,604, filed on Sep. 7, 2012, provisional application No. 61/744,238, filed on Sep. 21, 2012.

(51) **Int. Cl.**
A01D 34/00 (2006.01)
A01D 34/416 (2006.01)
A01D 34/84 (2006.01)

(52) **U.S. Cl.**
CPC ***A01D 34/4165*** (2013.01); ***A01D 34/84*** (2013.01)

(58) **Field of Classification Search**
CPC A01D 34/84
USPC 56/12.7, 13.7, 16.9, 17.5, 256
See application file for complete search history.

(56) **References Cited**

U.S. PATENT DOCUMENTS

3,019,844	A *	2/1962	Key	172/15
3,197,951	A *	8/1965	Zick	56/255
3,531,922	A *	10/1970	Hansen	56/13.7
3,686,839	A *	8/1972	Lambert	56/11.6
3,782,085	A *	1/1974	Parker et al.	56/11.6
3,803,818	A *	4/1974	Chaney	56/11.6
4,170,099	A *	10/1979	Owens	56/16.9
4,453,372	A *	6/1984	Remer	56/13.7
4,718,221	A *	1/1988	Wessel et al.	56/16.9
5,159,803	A *	11/1992	Earley, Jr.	56/12.7
8,464,504	B1 *	6/2013	Huff	56/12.7
2002/0100266	A1 *	8/2002	Greenwell	56/12.7
2003/0230065	A1 *	12/2003	Hennum	56/12.7
2004/0045268	A1 *	3/2004	Nafziger	56/10.4
2004/0237491	A1 *	12/2004	Heighton et al.	56/12.7
2006/0005520	A1 *	1/2006	Weidman	56/12.7
2007/0130901	A1 *	6/2007	McMahan	56/13.7

* cited by examiner

Primary Examiner — Robert Pezzuto
Assistant Examiner — Mai Nguyen

(57) **ABSTRACT**

The present invention involves a multiply adjustable, obstacle responsive mower deck mounted "edge" trimmer that is easily adjustable, easily maintained and stored, low-profile, and requires no outside power source.
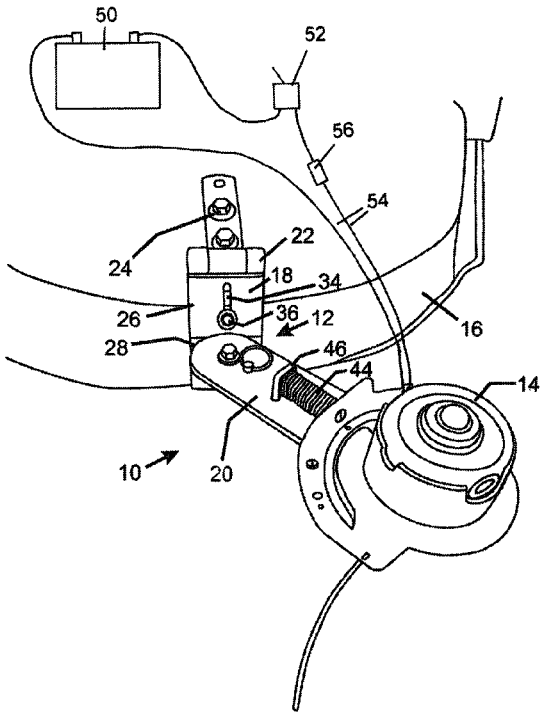
8 Claims, 4 Drawing Sheets