US009410306B2

(12) **United States Patent**
Ozaki

(10) **Patent No.: US 9,410,306 B2**
(45) **Date of Patent: Aug. 9, 2016**

(54) **HYDRAULIC EXCAVATOR**

(71) Applicant: **KOMATSU LTD.**, Tokyo (JP)

(72) Inventor: **Tomoaki Ozaki**, Komatsu (JP)

(73) Assignee: **KOMATSU LTD.**, Tokyo (JP)

(*) Notice: Subject to any disclaimer, the term of this patent is extended or adjusted under 35 U.S.C. 154(b) by 0 days.

(21) Appl. No.: **14/398,512**

(22) PCT Filed: **Aug. 8, 2014**

(86) PCT No.: **PCT/JP2014/071026**

§ 371 (c)(1),
(2) Date: **Nov. 3, 2014**

(87) PCT Pub. No.: **WO2016/021046**

PCT Pub. Date: **Feb. 11, 2016**

(65) **Prior Publication Data**

US 2016/0040390 A1 Feb. 11, 2016

(51) **Int. Cl.**

E02F 9/08	(2006.01)
F01N 3/20	(2006.01)
F01N 13/18	(2010.01)

(52) **U.S. Cl.**

CPC ***E02F 9/0883*** (2013.01); ***E02F 9/0866*** (2013.01); ***F01N 3/2066*** (2013.01); ***F01N 13/18*** (2013.01); *E02F 9/0833* (2013.01); *E02F 9/0875* (2013.01); *E02F 9/0891* (2013.01)

(58) **Field of Classification Search**

CPC E02F 9/0883; E02F 9/0866; E02F 9/0875; E02F 9/0833; B60Y 2200/412; F01N 2610/1406

See application file for complete search history.

(56) **References Cited**

U.S. PATENT DOCUMENTS

8,973,692	B1 *	3/2015	Okuda	B60L 11/1877 180/68.5
2005/0201852	A1 *	9/2005	Iida	E02F 9/0883 414/385
2010/0266458	A1 *	10/2010	Takeshita	E02F 9/0866 422/109
2011/0005853	A1 *	1/2011	Kamiya	B60K 13/04 180/296
2012/0174566	A1 *	7/2012	Yamashita	B60K 13/04 60/295
2013/0071295	A1	3/2013	Terakawa et al.	
2014/0023473	A1 *	1/2014	Kobayashi	E02F 9/0875 414/687
2014/0196975	A1	7/2014	Hata et al.	

(Continued)

FOREIGN PATENT DOCUMENTS

CN	103562509	A	2/2014
CN	103608524	A	2/2014

(Continued)

OTHER PUBLICATIONS

U.S. Appl. No. 14/398,518, filed Nov. 3, 2014, Ozaki.

Primary Examiner — John Walters
Assistant Examiner — Brian Swenson
(74) *Attorney, Agent, or Firm* — Drinker Biddle & Reath LLP

(57) **ABSTRACT**

A hydraulic excavator capable of suppressing deterioration of a reducing agent stored in a reducing agent tank is provided. The hydraulic excavator includes: a main valve supplying a hydraulic oil to a work implement; an exhaust gas treatment device treating an exhaust gas from an engine through a reduction reaction; the reducing agent tank arranged forward of the main valve and storing the reducing agent to be supplied to the exhaust gas treatment device; and a partition plate arranged between the reducing agent tank and the main valve.
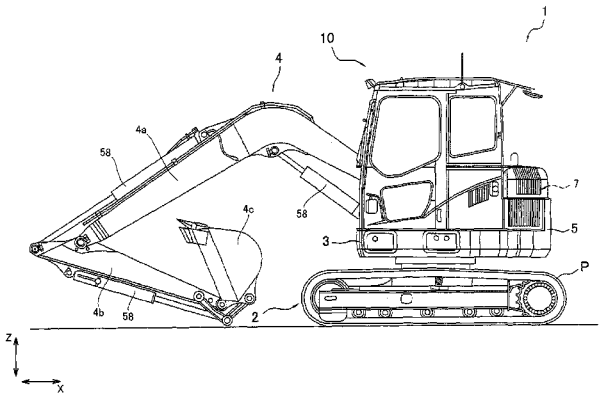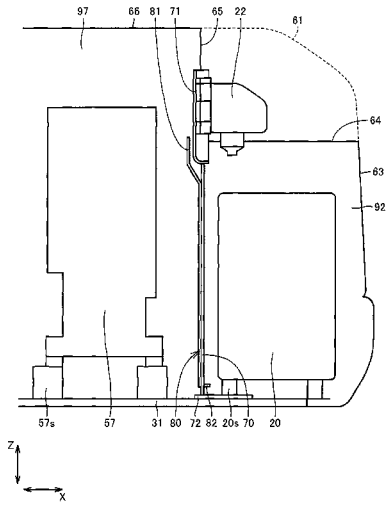
7 Claims, 9 Drawing Sheets