United States Patent [19]

Dalisa et al.

[11] **4,203,106**

[45] **May 13, 1980**

[54] **X-Y ADDRESSABLE ELECTROPHORETIC DISPLAY DEVICE WITH CONTROL ELECTRODE**

[75] Inventors: **Andrew L. Dalisa**, Yorktown Heights; **Barry M. Singer**, New York, both of N.Y.

[73] Assignee: **North American Philips Corporation**, New York, N.Y.

[21] Appl. No.: **854,117**

[22] Filed: **Nov. 23, 1977**

[51] **Int. Cl.**[2] **G09F 9/32**

[52] **U.S. Cl.** **340/787**; 340/716; 340/763; 340/785; 350/362

[58] **Field of Search** ..... 340/336, 324 M, 324 R, 340/716, 763, 785, 787; 350/362

[56] **References Cited**

U.S. PATENT DOCUMENTS

3,892,568	7/1975	Ota	340/336
3,897,137	7/1975	Dobbins	350/362
4,046,456	9/1977	Bonne	350/362
4,071,430	1/1978	Liebert	350/362

Primary Examiner—Marshall M. Curtis
Attorney, Agent, or Firm—Thomas A. Briody; Jack Oisher; James J. Cannon, Jr.

[57] **ABSTRACT**

An electrophoretic display device in which an colloidal suspension of pigment particles is contained between a pair of electrodes, and means are provided in the structure of the electrodes of the cell for the establishment of a voltage threshold for the transport of pigment particles. This threshold permits the changing of the spatial distribution of pigment particles in specifically defined regions of the display cell.
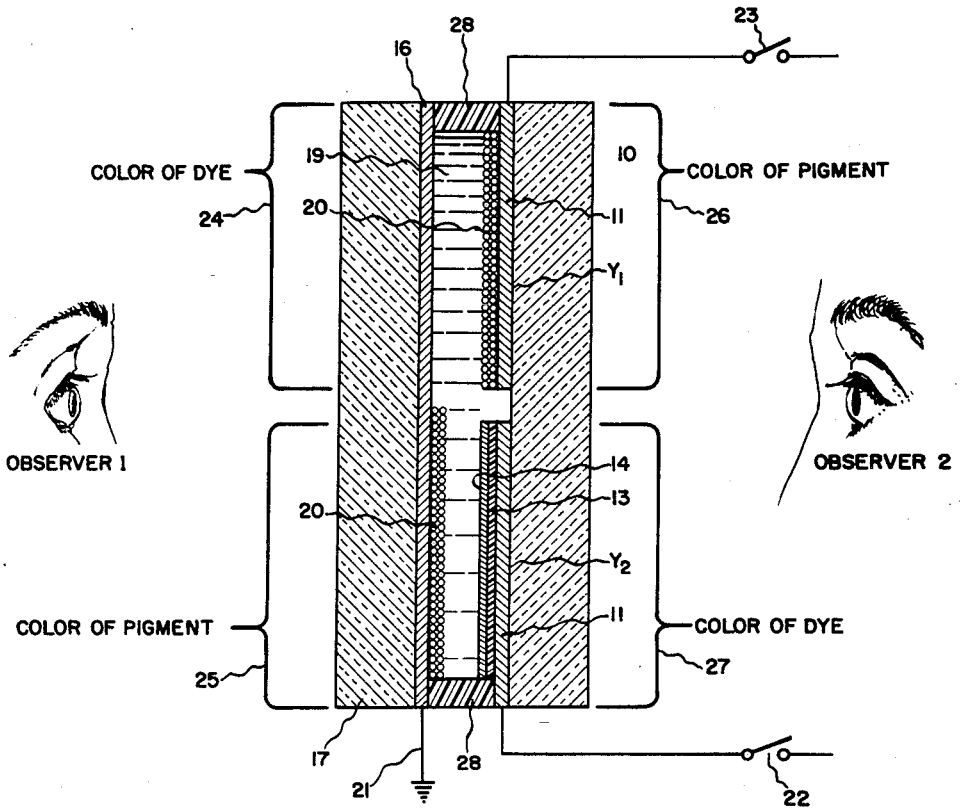
10 Claims, 10 Drawing Figures