Nov. 29, 1966 P. E. DU CHARME 3,287,805

HAIR CLIPPER WITH CUT REGULATOR INDICATOR

Filed April 19, 1966 4 Sheets-Sheet 1

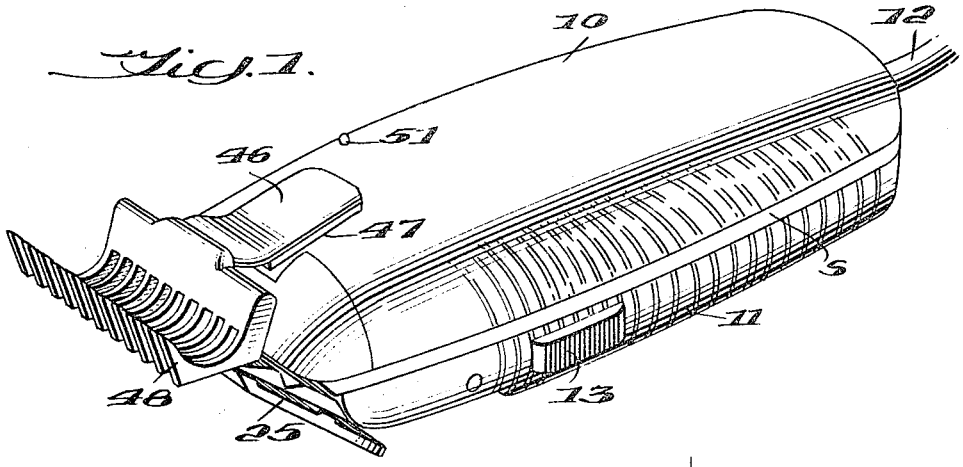

Fig. 1.

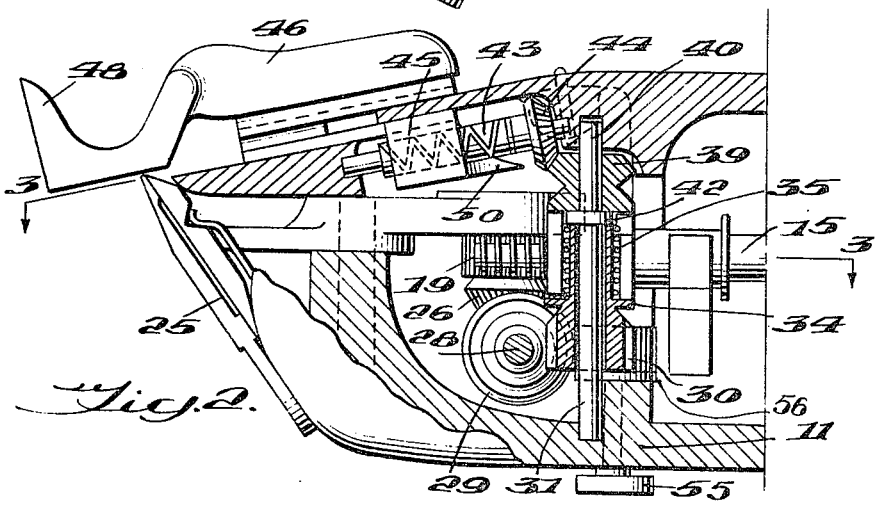

Fig. 2.

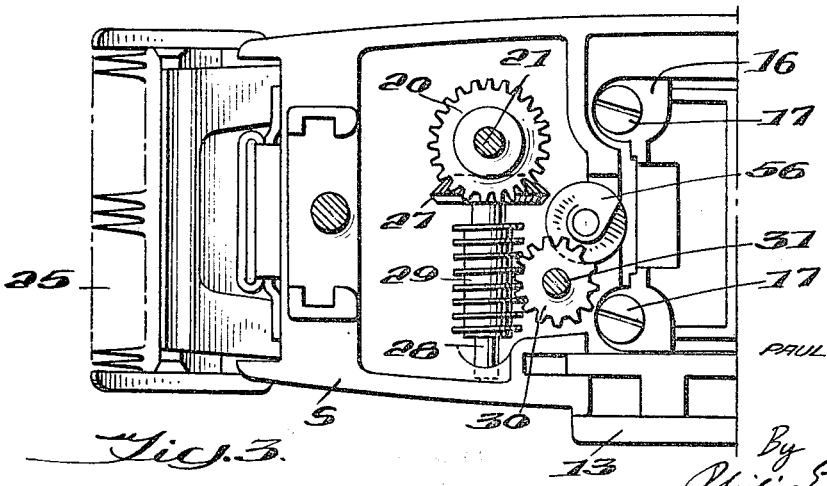

Fig. 3.

INVENTOR
PAUL E. DU CHARME,

By Philip P. Sigers
ATTORNEY