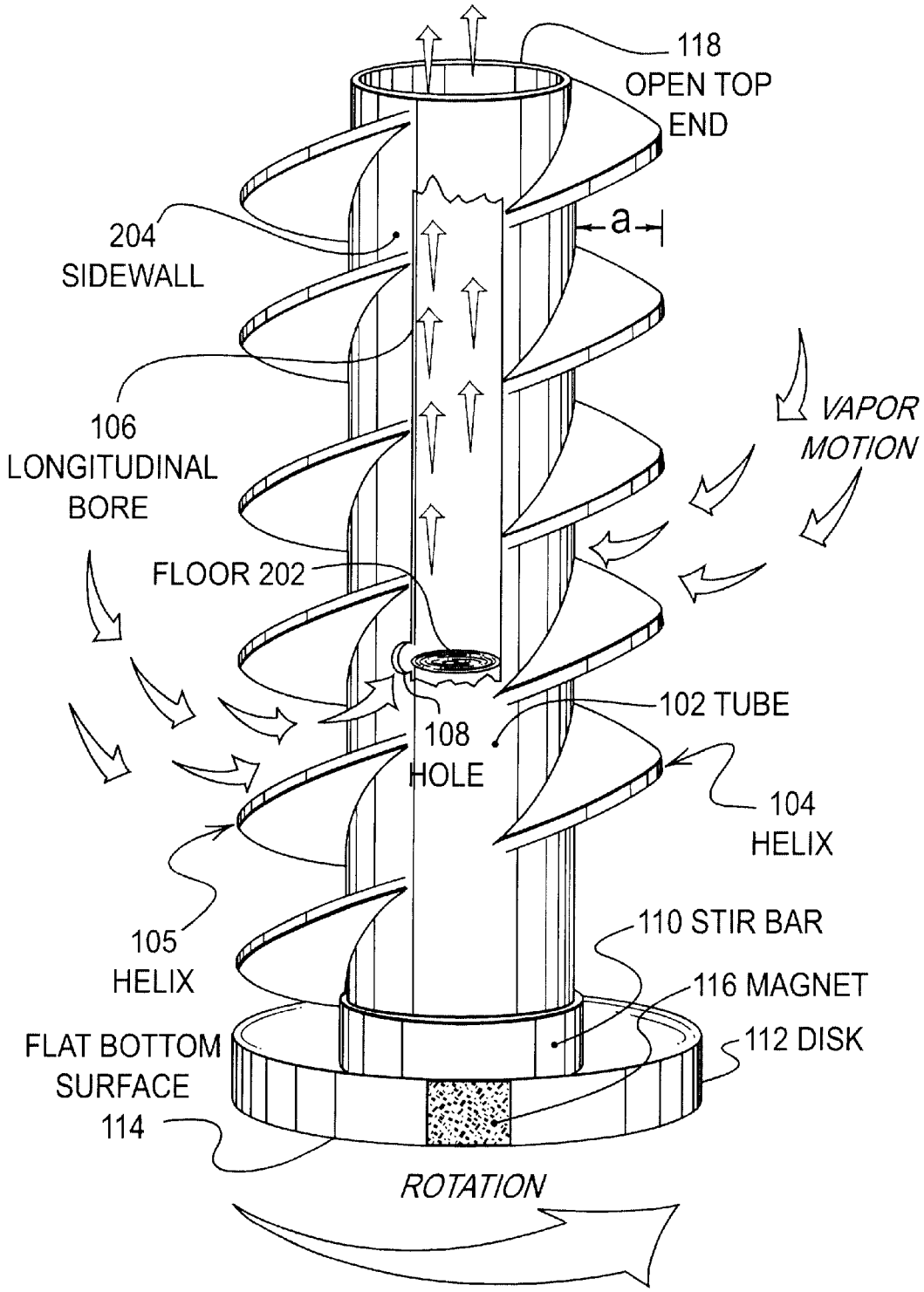
118
OPEN TOP
END
204
SIDEWALL
a
106
LONGITUDINAL
BORE
VAPOR
MOTION
FLOOR 202
102 TUBE
108
HOLE
104
HELIX
105
HELIX
110 STIR BAR
116 MAGNET
112 DISK
FLAT BOTTOM
SURFACE
114
ROTATION

FIGURE 2