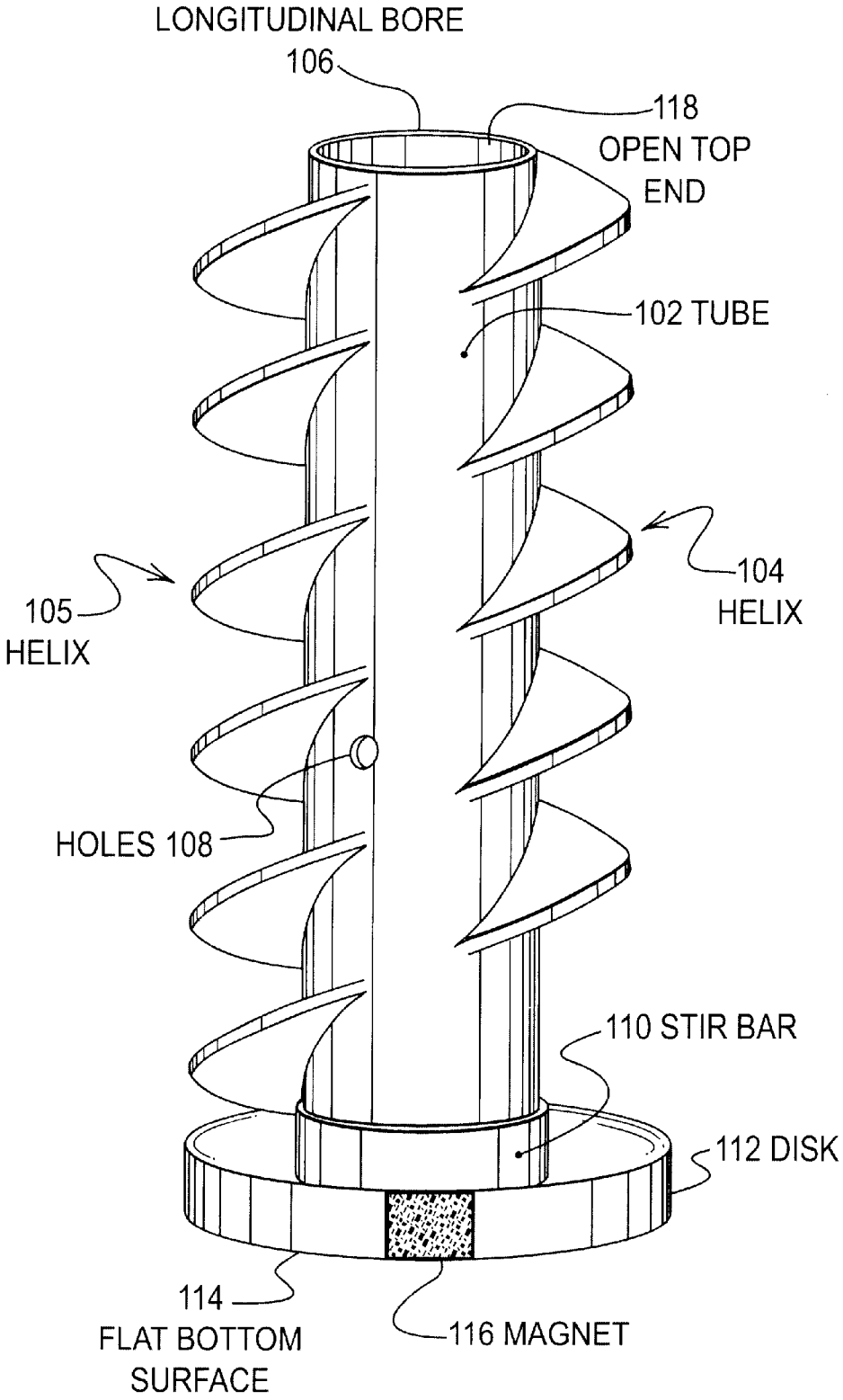
LONGITUDINAL BORE
106
118
OPEN TOP
END
102 TUBE
104
HELIX
105
HELIX
HOLES 108
110 STIR BAR
112 DISK
114
FLAT BOTTOM
SURFACE
116 MAGNET

FIGURE 1