United States Patent [19]

DeLuca et al.

[11] **Patent Number: 4,872,005**

[45] **Date of Patent: Oct. 3, 1989**

[54] **PAGING RECEIVER CAPABLE OF REMINDING A USER OF AN IMPORTANT MESSAGE EVENT**

[75] Inventors: **Joan S. DeLuca**, Boca Raton; **Thomas F. Holmes**, Boynton Beach; **Mark J. Abbaticchio**, Plantation, all of Fla.

[73] Assignee: **Motorola, Inc.**, Schaumburg, Ill.

[21] Appl. No.: **140,364**

[22] Filed: **Jan. 4, 1988**

[51] **Int. Cl.**[4] **H04Q 7/00**; G04B 47/00

[52] **U.S. Cl.** **340/825.440**; 368/10; 368/109; 340/825.460

[58] **Field of Search** 340/825.44, 825.46, 340/825.55, 309.1, 309.15; 368/109, 107, 108, 10, 28, 41

[56] **References Cited**

U.S. PATENT DOCUMENTS

3,745,761	7/1973	Tsuruishi .	
3,813,533	5/1974	Cone et al. .	
3,822,547	7/1974	Fujita .	
3,834,153	9/1974	Yoda et al. .	
3,937,004	2/1976	Natori et al. .	
3,999,050	12/1976	Pitroda .	
4,162,610	7/1979	Levine .	
4,246,650	1/1981	Moritani et al.	368/109
4,267,589	5/1981	Yamaguchi	368/109
4,548,510	10/1985	Levine .	
4,682,148	7/1987	Ichikawa et al. .	
4,713,808	12/1987	Gaskill et al.	340/825.44

FOREIGN PATENT DOCUMENTS

0106237	6/1985	Japan	340/825.44
2146153	5/1985	United Kingdom	340/825.44

Primary Examiner—Donald J. Yusko
Assistant Examiner—E. O. Pudpud
Attorney, Agent, or Firm—William E. Zitelli; Vincent B. Ingrassia

[57] **ABSTRACT**

An electronic paging receiver for reminding a user of an important event includes a time of day clock for recording the time when a data message is received. The paging receiver computes a future alert time to remind the user of the receipt of the data message. Additionally, the user may enter a future alert time to generate a future alert. Further, the paging receiver is capable of detecting a special time/date field in the received data message to automatically generate a future alert.
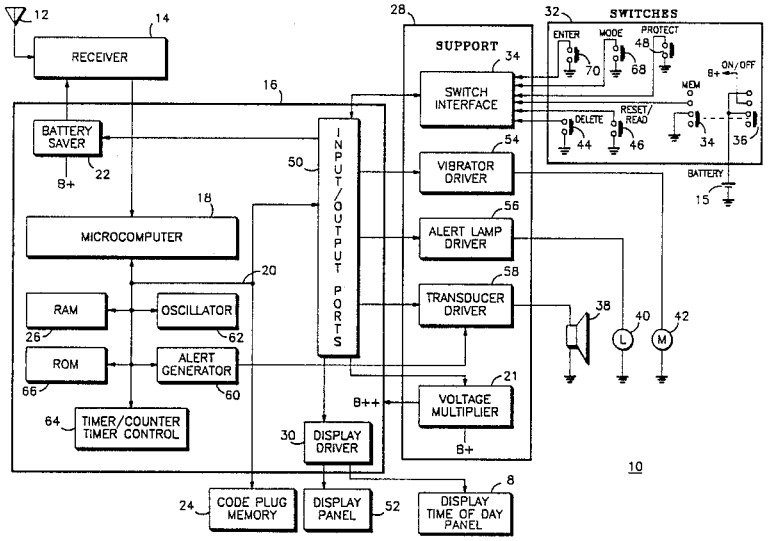
22 Claims, 11 Drawing Sheets