No. 670,405.

Patented Mar. 19, 1901.

R. M. HUNTER.

MOTOR VEHICLE.

(Application filed Jan. 25, 1901.)

(No Model.)

2 Sheets—Sheet 1.

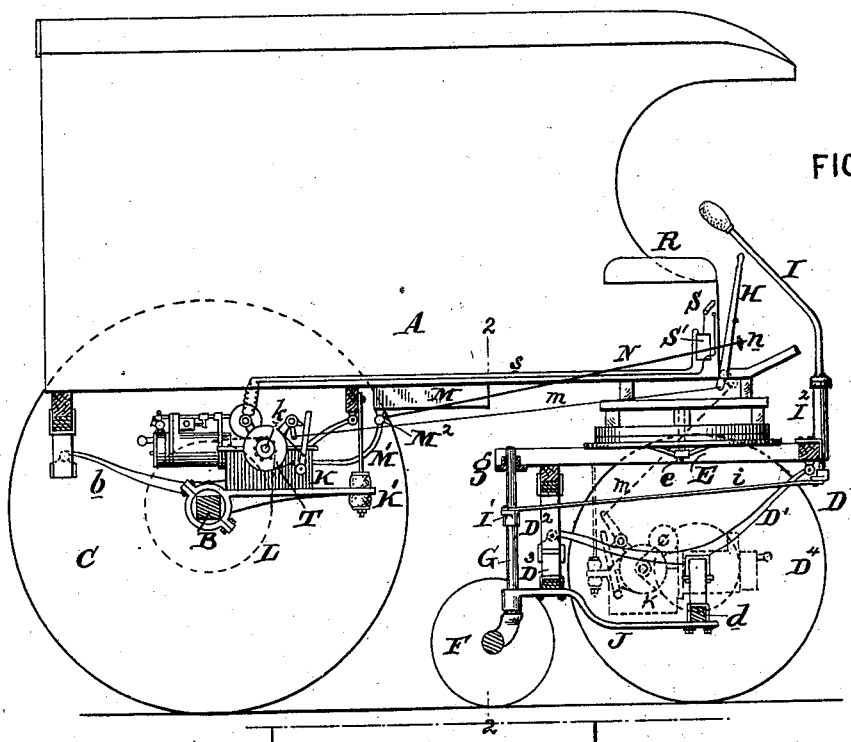

FIG. 1

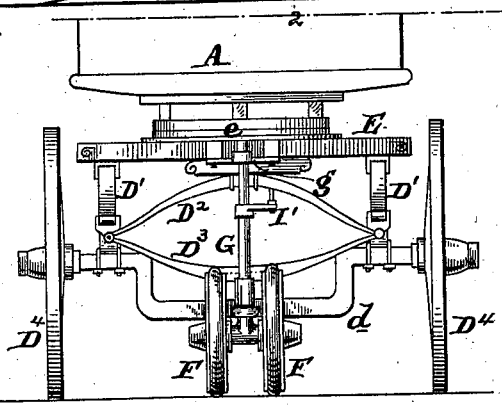

FIG. 2

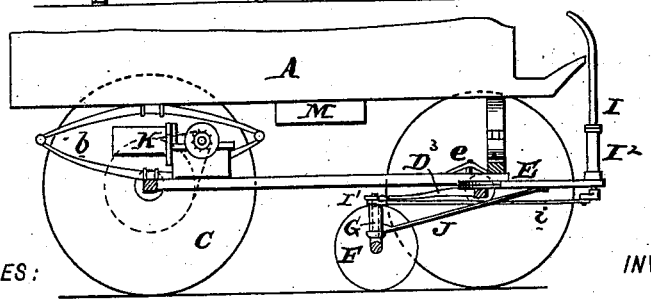

FIG. 4

WITNESSES:

E. M. Hunter

C. S. Phillips

INVENTOR

R. M. Hunter

THE NORRIS PETERS CO., PHOTO-LITHO., WASHINGTON, D. C.