United States Patent [19]

Vezirian

[11] **3,964,605**

[45] **June 22, 1976**

[54] **PROTECTIVE CONTAINER PACKAGE FOR A ROCK DRILL BIT ASSEMBLY**

[75] Inventor: **Edward Vezirian,** Fountain Valley, Calif.

[73] Assignee: **Smith International, Inc.,** Newport Beach, Calif.

[22] Filed: **Nov. 1, 1974**

[21] Appl. No.: **519,981**

[52] **U.S. Cl.** **206/349;** 206/497; 220/353

[51] **Int. Cl.**[2] **B65D 85/54;** B65D 65/02; B65D 43/12

[58] **Field of Search** ..... 206/349, 497, 327, 530, 206/526, 815; 220/353, 352, 4 B, 94 A, DIG. 13, DIG. 12

[56] **References Cited**

UNITED STATES PATENTS

2,414,171	1/1947	Scharff	220/DIG. 12 UX
3,152,691	10/1964	Hultgren	220/352
3,170,571	2/1965	Knapp et al.	206/72
3,244,272	4/1966	Beaman et al.	220/306 X
3,331,105	7/1967	Gordon	206/497 X
3,490,582	1/1970	Farquhar	206/497 X
3,587,904	6/1971	Harris et al.	220/94 A
3,710,931	1/1973	Hollinger	206/497

FOREIGN PATENTS OR APPLICATIONS

806,158	9/1936	France	206/501
820,419	11/1951	Germany	206/349
269,366	10/1950	Switzerland	206/327

Primary Examiner—Leonard Summer

[57] **ABSTRACT**

A protective container package including a two piece container assembly with a cavity therein particularly adapted for securely containing a rock drill bit assembly, a shrinkable skin encapsulation envelope shrunk therearound to provide a substantially waterproof enclosed package, and a relatively narrow strap for reinforcingly securing the encapsulated two piece container assembly together with a rock drill bit assembly enclosed therein.
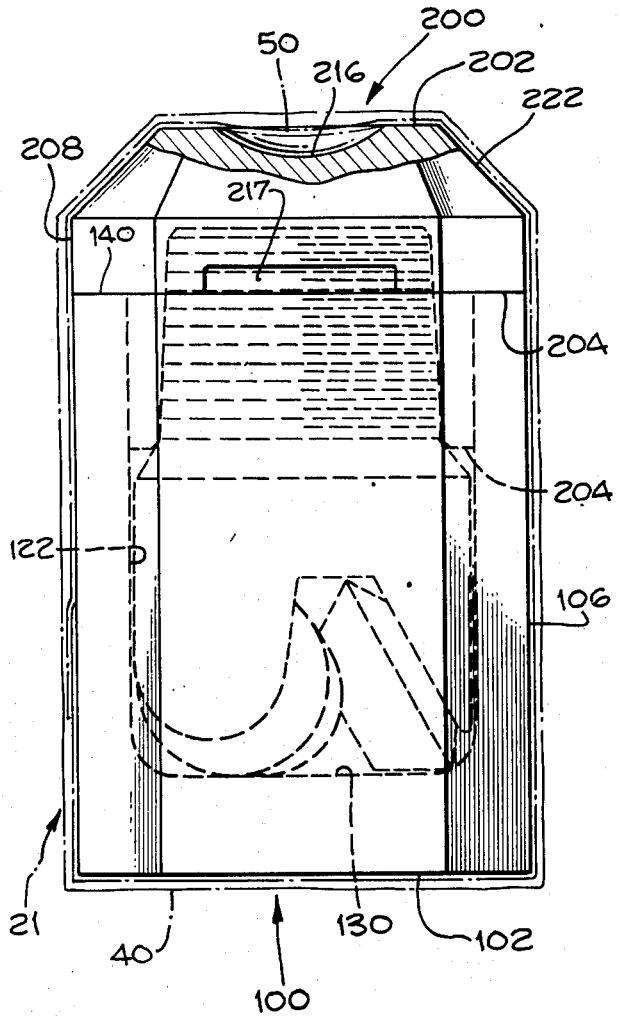
13 Claims, 13 Drawing Figures