July 26, 1966 H. C. EMERICK 3,263,005

PROCESS FOR PRODUCING CONTACT LENSES AND OTHER OPTICAL AIDS

Filed April 17, 1963

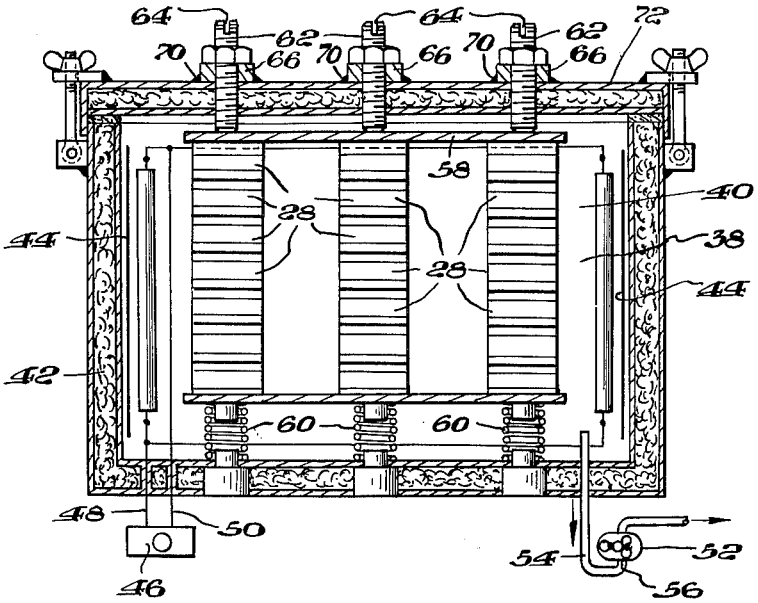

Fig. 4.

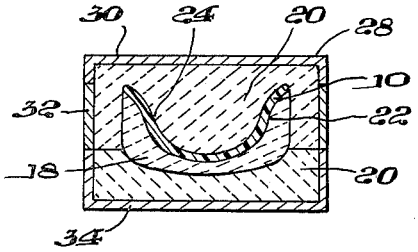

Fig. 2.

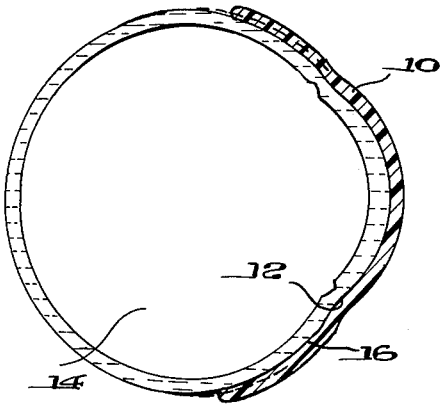

Fig. 1.

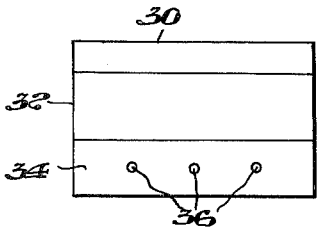

Fig. 3.

INVENTOR.
HAROLD C. EMERICK.
BY
Albert L. Jeffers.
his
ATTORNEY